EN

Magnetically Coded Safety Switches CMS

EUCHNER

More than safety.

EUCHNER

More than safety.

Headquarters in Leinfelden-Echterdingen

Logistics center in Leinfelden-Echterdingen

Production location in Unterböhringen

Internationally successful – the EUCHNER company

EUCHNER GmbH + Co. KG is a world-leading company in the area of industrial safety technology. EUCHNER has been developing and producing high-quality switching systems for mechanical and systems engineering for more than 60 years.
The medium-sized family-operated company based in Leinfelden, Germany, employs around 750 people around the world.

17 subsidiaries and other sales partners in Germany and abroad work for our international success on the market.

Quality and innovation – the EUCHNER products

A look into the past shows EUCHNER to be a company with a great inventive spirit. We take the technological and ecological challenges of the future as an incentive for extraordinary product developments.

EUCHNER safety switches monitor safety doors on machines and installations, help to minimize dangers and risks and thereby reliably protect people and processes. Today, our products range from electromechanical and electronic components to intelligent integrated safety solutions. Safety for people, machines and products is one of our dominant themes.

We define future safety technology with the highest quality standards and reliable technology. Extraordinary solutions ensure the great satisfaction of our customers. The product ranges are subdivided as follows:

- Transponder-coded Safety Switches
- Transponder-coded Safety Switches with guard locking
- Multifunctional Gate Box MGB
- Access management systems (Electronic-Key-System EKS)
- Electromechanical Safety Switches
- Magnetically coded Safety Switches
- Enabling Switches
- Safety Relays
- Emergency Stop Devices
- Hand-Held Pendant Stations and Handwheels
- Safety Switches with AS-Interface
- Joystick Switches
- Position Switches

made
in
Germany

Contents

Non-Contact Safety Systems CMS

Evaluation unit	Read heads	Function	Category acc. to EN ISO 13849-1
	1...2	**CMS-E-AR** ▸ 1 safety contact ▸ 1 to 2 read heads (NO contacts wired in parallel) can be connected ▸ Category 3 according to EN ISO 13849-1 ▸ PL d according to EN ISO 13849-1 or	Cat. 3 / PLd
	3...30	▸ 3 to 30 read heads (NO contacts wired in series) can be connected ▸ Category 1 according to EN ISO 13849-1 ▸ PL c according to EN ISO 13849-1 ▸ (see page 8)	Cat. 1 / PLc
	1	**CMS-E-BR** ▸ 1 safety contact ▸ 1 auxiliary contact ▸ 1 feedback loop can be connected ▸ 1 to 4 read heads can be connected ▸ Category 4 according to EN ISO 13849-1 ▸ PL e according to EN ISO 13849-1 or	Cat. 4 / PLe
	2...4	▸ 2 to 4 read heads can be connected ▸ Category 3 according to EN ISO 13849-1 ▸ PL d according to EN ISO 13849-1 (see page 24)	Cat. 3 / PLd
	1	**CMS-E-ER** ▸ 2 safety contacts ▸ 1 auxiliary contact ▸ 1 feedback loop can be connected ▸ 1 read head can be connected ▸ Start button can be connected ▸ Category 4 according to EN ISO 13849-1 ▸ PL e according to EN ISO 13849-1 or	Cat. 4 / PLe
	2...30	▸ 2 to 30 read heads can be connected ▸ Category 3 according to EN ISO 13849-1 ▸ PL d according to EN ISO 13849-1 (see page 26)	Cat. 3 / PLd
	1	**CMS-E-FR** ▸ 2 safety contacts ▸ 1 auxiliary contact ▸ 6 monitoring outputs ▸ 1 feedback loop can be connected ▸ 1 read head can be connected ▸ Start button can be connected ▸ Category 4 according to EN ISO 13849-1 ▸ PL e according to EN ISO 13849-1 or	Cat. 4 / PLe
	2...30	▸ 2 to 30 read heads can be connected ▸ Category 3 according to EN ISO 13849-1 ▸ PL d according to EN ISO 13849-1 (see page 28)	Cat. 3 / PLd

Functional Description

The **C**oded **M**agnetic **S**afety systems CMS comprise three components:

- Actuator
- Read head
- Evaluation unit

Several permanent magnets are accommodated in the actuator housing. The number of magnets, their position (polarization) in the housing and the magnetic field strength characterize the actuator type.
For this reason they are also called coded actuators.

Within a series, the individual actuator coding is identical. Using one actuator type on a machine or complete system allows for quick and easy replacement.

Reed contacts are installed in the read head of the safety system CMS. The operating principle for the reed contacts (NC contacts or NO contacts), the number of reed contacts fitted and their physical arrangement determine the type of read head.
The contact blades on the reed contacts will close when under the influence of the magnetic field from the actuator.

The actuators and read heads are matched in pairs and are available in 4 different housings.
Depending on the application, the system operator can select a rectangular or cylindrical design.
The read head only responds to the specific mating component, that is a specific actuator which is allocated to the read head type. The same applies to the allocation of the read head to the evaluation unit.

The evaluation unit is the system unit which is downstream from the read head. Using internal relays, it switches the safety circuit as a function of the position of the reed contacts.
The evaluation unit in degree of protection IP 20 is mounted in the control cabinet.

EUCHNER offers various evaluation units. The unit is selected as a function of the number of read heads to be connected and the overall system category to be achieved according to EN ISO 13849-1. The related evaluation units are described in detail in the following sections.

In order to achieve a particular safety level, fault analyses must be carried out where safety-related components are used.
A fault could be caused by a short circuit in the connecting lead or by welding of a reed contact in the closed position. If a reed contact is welded, the magnetic force might not be strong enough to open the contact. For reasons of safety, several reed contacts (2 or 3, depending on the switch type) are fitted to each read head.
The NC contact/NO contact combination is used as an example. If the actuator is moved into the read head's operating distance, the reed contacts are switched by the magnets (in the actuator). Magnets with different polarization are assigned to the NC and NO contacts. The downstream evaluation unit monitors the read head: the NC/NO contacts in the read head must always have opposite states.
If this is not the case, the safety contacts on the evaluation unit are not switched and the unit switches to the blocked state.

The read head is fastened to the fixed part of the safety guard and is connected to the evaluation unit using a two-core or four-core cable.
When the safety guard is closed, the actuator is moved towards the read head. As soon as there is an actuator in the operating distance (i.e. the switch-on distance s_{ao} is reached) the reed contacts in the read head switch, i.e. they change their contact position.

If the evaluation unit detects that the reed contacts are in a specific position on all read heads connected, i.e. all actuators are in the operating distance, the safety contact is switched on.

If the actuator is moved away from the read head, the magnetic field around the reed contacts reduces with increasing distance. When the switch-off distance s_{ar} is reached, the reed contacts return to their preloaded position (home position).

The sensitivity of the reed contacts and the field strength of the magnets determine the switching distance between the actuator and the read head. Diagrams of the typical operating distances of the individual sensor units are shown in the technical data for the actuators and read heads.
The illustration of the operating distance in x, y and z directions provides the user with information on how the actuator and read head must be positioned. When ideally positioned, the read head is in the middle of the operating distance.
The actuator and read head sensor units have a large operating distance. The advantage of this fact is that the door clearance setting may vary within the limits of the operating distance.
The safety systems CMS have switching characteristics with hysteresis ($s_{ar} > s_{ao}$).
If the read head is adjusted just inside the actuator's s_{ao} operating distance, the plant will not be switched off immediately if the door vibrates slightly.
The switch-on and switch-off distances shown in the ordering tables refer to the approach of the sensor unit in the x direction (frontal approach direction). If the actuator approaches the read head from the side, the switching distances are likely to be reduced.
The switch-on and switch-off distances in the x, y and z directions are given by the operating diagrams.

An excessively low approach speed in the z direction (side approach direction) can result in an error in some evaluation units. For further information on the approach speed, refer to the individual product descriptions.

The magnetic systems are notable for their high degree of protection and compact design. They are therefore particularly suitable for areas where dirt and cleaning are major factors.

A major advantage of EUCHNER's CMS safety switch is that the actuator and read head can be fitted behind stainless steel. This property makes it possible to use the system in the food industry in particular.
The switching distances are, however, reduced in line with the material and wall thickness.
Installation using the corrosion-resistant safety screws (supplied) provides tamper-proof mounting of the actuator and read head on the safety guard.

General Information

According to EN 1088, interlocking devices are mechanical or electrical devices which are designed to prevent the operation of a machine element for as long as the movable safety guard is left open.

Safety switches without guard locking are used if the control concept is structured in such a way as to ensure that:

- the machine shuts down immediately upon opening the safety guard or
- the stop time (the time between the stop order being triggered by the interlocking device and the point of no further risk from hazardous machine function) is shorter than the access time.

In the case of these safety switches, there are a number of different operating principles:

- Mechanical safety switches, e.g. EUCHNER safety switches series NZ, NP and NM
- Non-contact safety switches based on transponder technology, e.g. EUCHNER safety systems series CES
- Non-contact safety switches based on a magnetically coded principle, e.g. EUCHNER safety systems series CMS

Magnetically coded safety switches are interlocking devices which are designed to protect people and machines.
Compared with electromechanical safety switches, they are used if:

- a high level of protection against tampering must be achieved
- strict hygiene requirements are to be met (e.g. in the food industry)
- a precise door guide is not possible
- machine doors are subjected to heavy vibration.

The EUCHNER safety system CMS is based on the magnetic principle. The tamper-proof coded system was specifically developed to monitor moving machine components and movable safety guards.

The EUCHNER safety system CMS... offers important advantages

- Non-contact safety guard monitoring
  - No mechanical wear of the sensor units
- Long mechanical life (100 million operating cycles) of reed contacts
- The coding for all the actuators in a series is identical
  - Quick easy replacement if required
- Evaluation units permit connection of various versions of actuators and read heads (whether rectangular or cylindrical)
- Actuator and read head have high degree of protection IP 67
- The actuator and read head can be fitted behind stainless steel
- Operates perfectly under extreme environmental conditions, e.g. dirt and moisture
- Large operating distance with hysteresis
- The sensor units can be approached from different directions
- Low costs with maximum benefits
- The rail in accordance with DIN EN 60715 TH35 ensures ease of assembly in the control cabinet.
- For connection to a safe control system with or without pulse signals
- LED displays
  - Simplified diagnostics in case of service work
- Approval: TÜV and UL

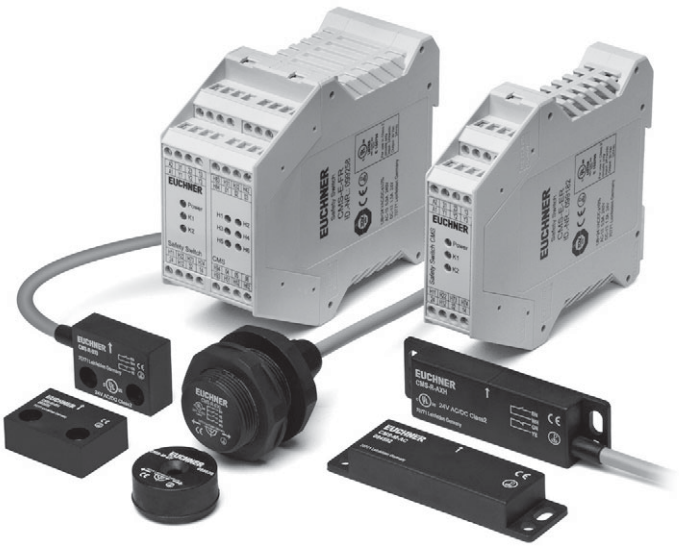

Selection table for non-contact safety system CMS-E-AR

Evaluation units	Connection	Design	Read head contact assembly	Assured switch-on distance S_{ao} [mm]	Assured switch-off distance S_{ar} [mm]	Number of read heads	Category/ PL according to EN ISO 13849-1 CMS-E-AR	Read head	Actuator
CMS-E-AR 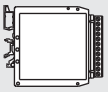 Page 8	Hard-wired encapsulated connection cable/ plug connector on the read head	Design A 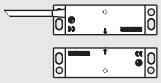 Page 12 - 15		6	18	1 ... 2	3 / PL d	CMS-R-AXD...	CMS-M-AB
				18	34			CSM-R-AXE...	CMS-M-AG
				9 For contact status indication and LED: 7	23 For contact status indication and LED: 15			CMS-R-AXR...	CMS-M-AI
				6	18	3 ... 30	1 / PL c	CMS-R-AXF...	CMS-M-AB
				18	34			CMS-R-AXG...	CMS-M-AG
		Design B 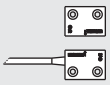 Page 16		6	17	1 ... 2	3 / PL d	CMS-R-BXO...	CMS-M-BH
				6	17	3 ... 30	1 / PL c	CMS-R-BXP...	
		Design C M25 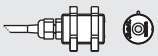 Page 18		7	16	1 ... 2	3 / PL d	CMS-R-CXA...	CMS-M-CA
				7	16	3 ... 30	1 / PL c	CMS-R-CXB...	
		Design E M30  Page 20		7	16	1 ... 2	3 / PL d	CMS-R-EXL...	CMS-M-EF
				7	16	3 ... 30	1 / PL c	CMS-R-EXN...	

Evaluation unit CMS-E-AR

- **Up to 30 read heads can be connected**
- **1 safety contact**

Functional description
The evaluation unit CMS-E-AR is suitable for the direct connection of up to 30 read heads.

Category/PL according to EN ISO 13849-1
- Category 1/PL c with 3 ... 30 read heads connected (NO contacts wired in series)
- Category 3/PL d with 1 ... 2 read heads connected (NO contacts wired in parallel)

LED displays

LED / Actuator	U_B Operating voltage green	D1 green	D2 green
Channel 1 in the operating distance	●	●	
Channel 2 in the operating distance	●		●

Evaluation unit CMS-E-AR Cat. 1 / PLc | Cat. 3 / PLd

Dimension drawing

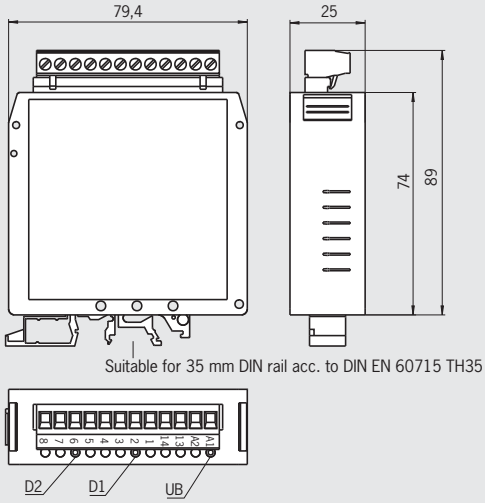

Block diagram

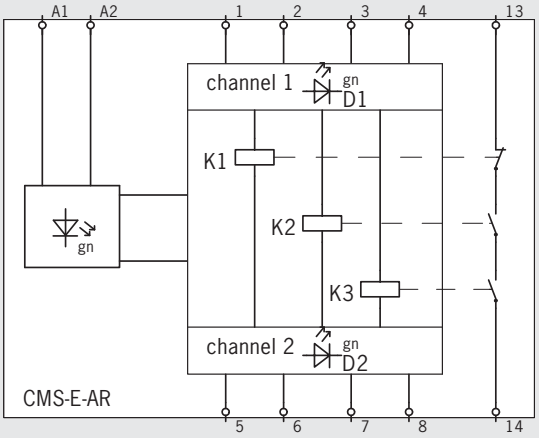

Ordering table

Evaluation unit	Scope of delivery	Order No. / Item
CMS-E-AR	Evaluation unit One 3-pin jumper One 4-pin jumper	**085536** CMS-E-AR

Technical data evaluation unit CMS-E-AR

Parameter		Value min.	Value typ.	Value max.	Unit
Housing material			Polyamide PA6.6		
Dimensions			89 x 79.4 x 25		mm
Weight			0.13		kg
Ambient temperature		0	-	+50	°C
Storage temperature		-25	-	+70	°C
Degree of protection according to EN 60529			Terminals IP 20 / housing IP 40		
Degree of contamination			2		
Mounting			DIN rail 35 mm according to DIN EN 60715 TH35		
Number of read heads			1 ... 30 in series [1] / 2 in parallel		
Connection			Plug-in connection terminals		
Operating voltage U_B			24 ±10% [2]		V DC
Internal fuse (operating voltage) (automatically resetting fuse PTC)			0.75		A
Switching voltage U		-	-	250	V AC
Current consumption		-	70	-	mA
Switching current I at 24 V		2	-	3000	mA
Breaking capacity P		-	-	750	VA
External contact fuse (safety circuit)			3 A gG		
Safety contacts			1		
Utilization category according to EN 60947-5-1			I_e [3]	U_e [3]	
		AC-1	3 A	250 V	
		AC-15	0.9 A	250 V	
		DC-13	1.8 A	24 V	
Switching load acc. to UL Class 2			Input: 24 V AC/DC Output: 30 V AC / 24 V DC		
Rated insulation voltage U_i			250		V
Vibration resistance			According to EN 60947-5-2		
Mechanical operating cycles relays			10×10^6		
EMC compliance			According to EN 60947-5-3		
Risk time according to EN 60947-5-3			10		ms
Reliability values according to EN ISO 13849-1					
as a function of the switching current at 24 V DC		≤ = 0.1 A	≤ = 1 A	≤ = 3A	
Number of switching cycles/year		< 96,000	< 75,000	< 18,000	
Mission time			20		years
Category	2 read heads > 2 read heads		3 1		
Performance Level (PL)	2 read heads > 2 read heads		d c		
PFH_d	2 read heads > 2 read heads		4.3×10^{-8} 1.1×10^{-6}		

1) For 3 m cable lengths. The number depends on the cable length.
2) All the electrical connections must either be isolated from the mains supply by a safety transformer according to EN 61558-2-6 with limited output voltage in the event of a fault, or by other equivalent isolation measures.
3) I_e = max. switching current per contact, U_e = switching voltage.

Connection examples evaluation unit CMS-E-AR

Connection example 1
- One read head on one evaluation unit CMS-E-AR
- Read head 1: reed contacts wired in parallel

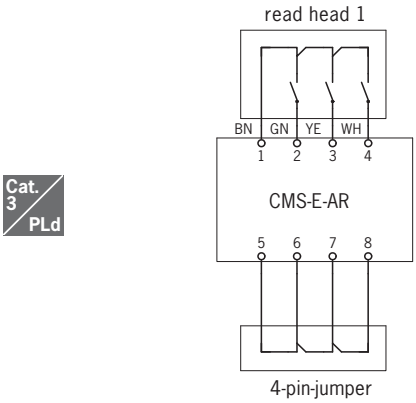

Connection example 2
- Two read heads on one evaluation unit CMS-E-AR
- Read head 1 and 2: reed contacts wired in parallel

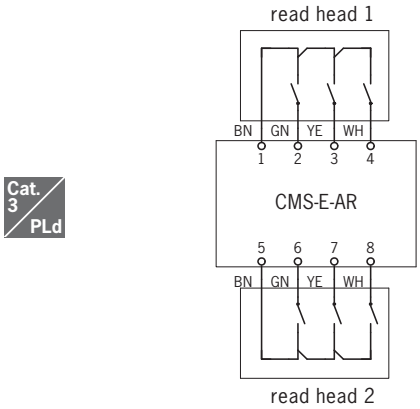

Connection example 3
- More than two read heads (max. of 30) on one evaluation unit CMS-E-AR
- Read head 1: reed contacts wired in parallel; read head 2 ... n: reed contacts wired in series

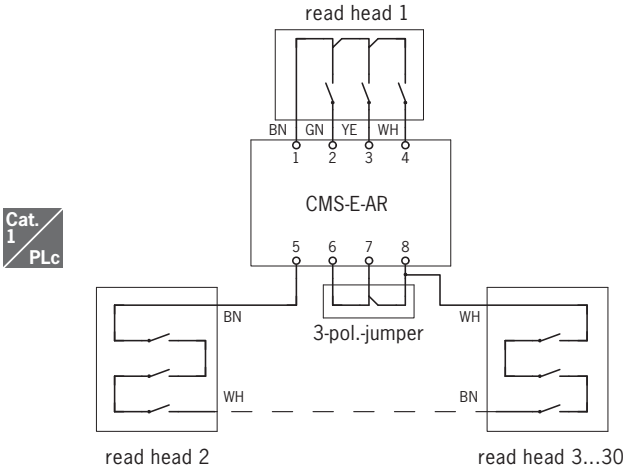

Notes
The following applies to all the illustrations:
Evaluation unit electrically isolated, actuator not in the operating distance.

Read heads and actuators design A

- **For use with evaluation unit CMS-E-AR**
- **Cube-shaped version 88 x 25 mm**
- **With connection cable**

Alignment of read head and actuator

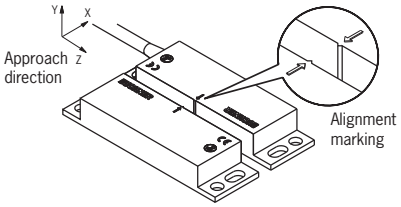

Note:
The dimensions of the actuators are the same as those of the read heads, although the former have no connection cable or plug connector.

Read heads/actuators design A

Dimension drawing

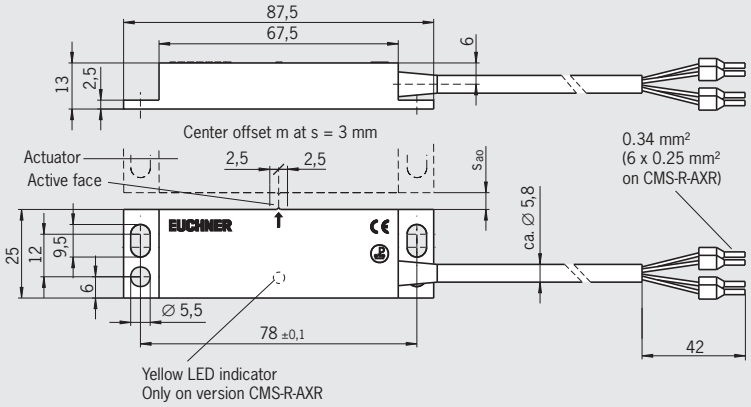

Ordering table (Read heads and actuators each incl. 2 safety screws M4 x 14)

Circuit diagram not actuated	Assured switch-on distance s_{ao} [mm]	Assured switch-off distance s_{ar} [mm]	Cable type	Cable length [m]	Read head Order no./item	Actuator Order no./item
 BN YE GN WH	6	18	**V** PVC	**3**	**084583** CMS-R-AXD-03V	**084591** CMS-M-AB
				5	**085732** CMS-R-AXD-05V	
			P PUR	**5**	**103858** CMS-R-AXD-05P	
	18	34	**V** PVC	**1**	**102385** CMS-R-AXE-01V	**085654** CMS-M-AG
				3	**084584** CMS-R-AXE-03V	
				5	**085733** CMS-R-AXE-05V	
			P PUR	**5**	**103859** CMS-R-AXE-05P	
 BN WH	6	18	**V** PVC	**3**	**084585** CMS-R-AXF-03V	**084591** CMS-M-AB
				5	**085734** CMS-R-AXF-05V	
			P PUR	**5**	**103860** CMS-R-AXF-05P	
	18	34	**V** PVC	**3**	**084586** CMS-R-AXG-03V	**085654** CMS-M-AG
				5	**085735** CMS-R-AXG-05V	
			P PUR	**5**	**103861** CMS-R-AXG-05P	
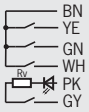 BN YE GN WH Rv PK GY	9 For contact status indication and LED: 7	23 For contact status indication and LED: 15	**V** PVC	**5**	**093975** [1] CMS-R-AXR-05VL	**093976** CMS-M-AI
			P PUR	**5**	**103863** [1] CMS-R-AXR-05PL	

1) No approvals

Technical data read heads and actuators design A

Parameter	Value min.	Value typ.	Value max.	Unit
Read heads				
Housing material	Reinforced PPS			
Ambient temperature	- 20	-	+60	°C
Degree of protection according to EN 60529	IP 67			
Installation position	Any, alignment with actuator should be kept in mind (markings)			
Connection	Molded cable with crimped ferrules			
Switching voltage	24			V
Switching current I_e	-	-	0.5	A
Contact status indication (only CMS-A-AXR...)				
Switching voltage	24			V
Switching current I_e	-	-	0.015	A
Method of operation	Magnetic, reed contact			
Mechanical life	100 x 10^6 operating cycles			
Vibration resistance	10 ... 55 Hz, amplitude 1 mm			
Shock resistance	30 g / 11 ms			
EMC compliance	According to EN 60947-5-3			
Center offset m from actuator	± 2.5 mm at a distance of s = 3 mm			
Switch-on distance s_{ao}	See ordering table and operating diagrams			
Switch-off distance s_{ar}				
Switching contacts				
Actuator				
Housing material	Reinforced PPS			
Ambient temperature	- 20	-	+60	°C
Degree of protection according to EN 60529	IP 67			
Installation position	Any, alignment with read head should be kept in mind (markings)			
Method of operation	Magnetic			
Vibration resistance	10 ... 55 Hz, amplitude 1 mm			
Shock resistance	30 g / 11 ms			
Center offset m from read head	± 2.5 mm at a distance of s = 3 mm			
Switch-on distance s_{ao}	See ordering table and operating diagrams			
Switch-off distance s_{ar}				

Operating diagrams design A

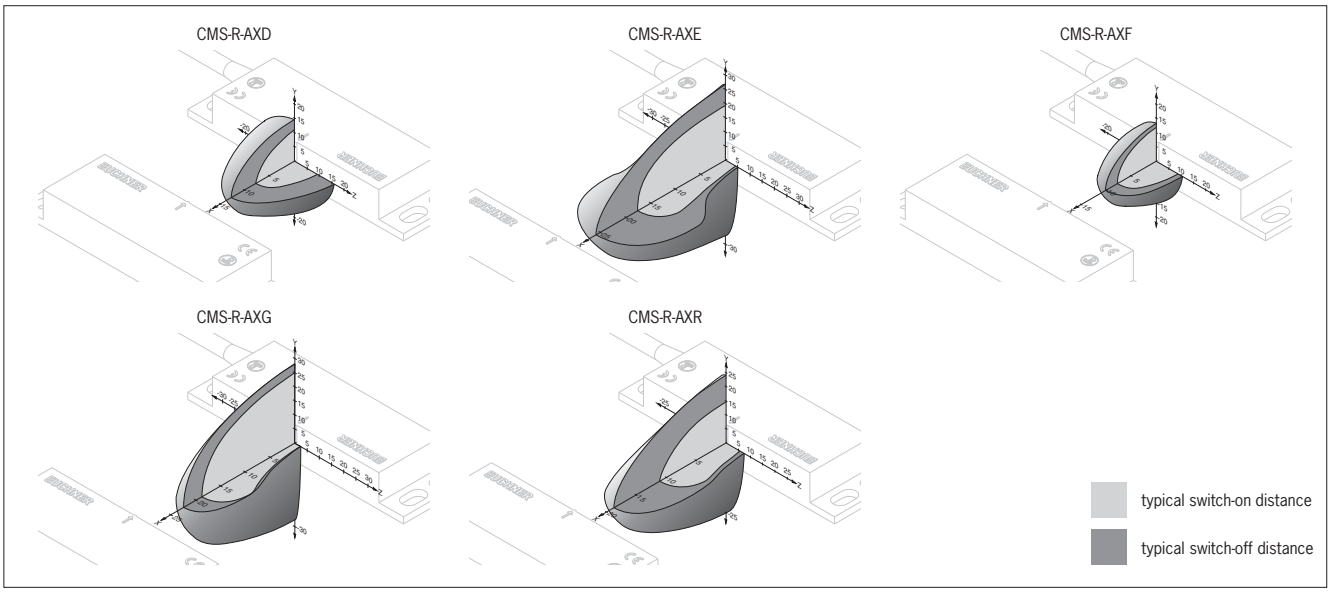

Read heads and actuators design A

- **For use with evaluation unit CMS-E-AR**
- **Cube-shaped version 88 x 25 mm**
- **With plug connector M8**

Alignment of read head and actuator

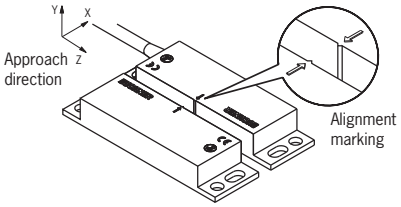

Note:
The dimensions of the actuators are the same as those of the read heads, although the former have no connection cable or plug connector.

Read heads/actuators design A

Dimension drawing

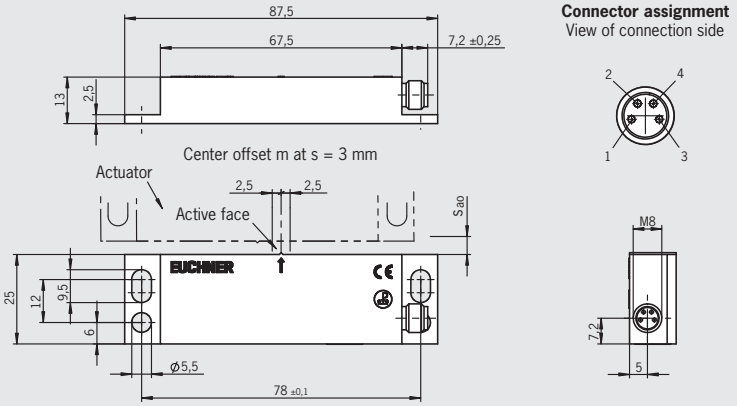

For connection cables see Accessories, page 54

Ordering table (Read heads and actuators each incl. 2 safety screws M4 x 14)

Circuit diagram not actuated	Assured switch-on distance s_{ao} [mm]	Assured switch-off distance s_{ar} [mm]	Plug connectors	Read head Order no./item	Actuator Order no./item
	6	18	**M8**	**100741** CMS-R-AXD-SC	**084591** CMS-M-AB
	18	34	**M8**	**100742** CMS-R-AXE-SC	**085654** CMS-M-AG
	6	18	**M8**	**100743** CMS-R-AXF-SC	**084591** CMS-M-AB
	18	34	**M8**	**100744** CMS-R-AXG-SC	**085654** CMS-M-AG

Technical data read heads and actuators design A

Parameter	Value min.	Value typ.	Value max.	Unit
Read heads				
Housing material	Reinforced PPS			
Ambient temperature	- 20	-	+60	°C
Degree of protection according to EN 60529	IP 67			
Installation position	Any, alignment with actuator should be kept in mind (markings)			
Connection	M8 plug connector			
Switching voltage	24			V
Switching current I_e	-	-	0.5	A
Method of operation	Magnetic, reed contact			
Mechanical life	100 x 10^6 operating cycles			
Vibration resistance	10 ... 55 Hz, amplitude 1 mm			
Shock resistance	30 g / 11 ms			
EMC compliance	According to EN 60947-5-3			
Center offset m from actuator	± 2.5 mm at a distance of s = 3 mm			
Switch-on distance s_{ao}	See ordering table and operating diagrams			
Switch-off distance s_{ar}				
Switching contacts				
Actuator				
Housing material	Reinforced PPS			
Ambient temperature	- 20	-	+60	°C
Degree of protection according to EN 60529	IP 67			
Installation position	Any, alignment with read head should be kept in mind (markings)			
Method of operation	Magnetic			
Vibration resistance	10 ... 55 Hz, amplitude 1 mm			
Shock resistance	30 g / 11 ms			
Center offset m from read head	± 2.5 mm at a distance of s = 3 mm			
Switch-on distance s_{ao}	See ordering table and operating diagrams			
Switch-off distance s_{ar}				

Operating diagrams design A

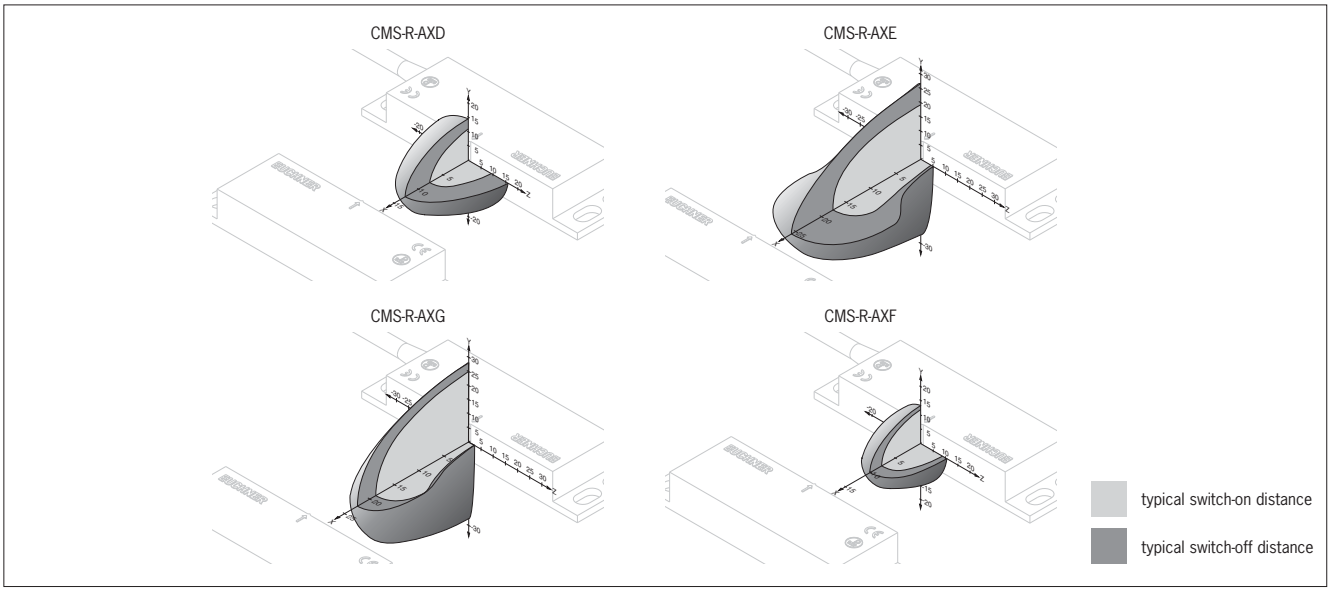

Read heads and actuators design B

- **For use with evaluation unit CMS-E-AR**
- **Cube-shaped version 36 x 26 mm**
- **With connection cable or plug connector M8**

Alignment of read head and actuator

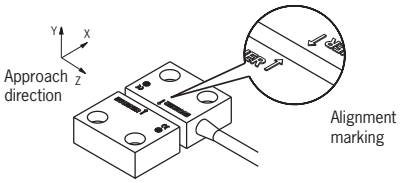

Note:
The dimensions of the actuators are the same as those of the read heads, although the former have no connection cable or plug connector.

Read heads/actuators design B

Dimension drawing

With connection cable

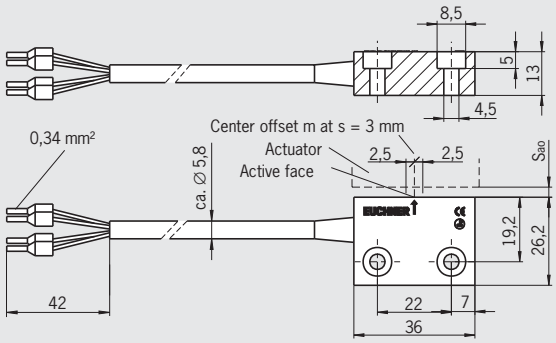

With plug connector M8

Connector assignment
View of connection side

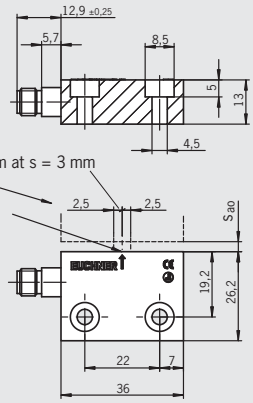

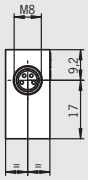

For connection cables see Accessories, page 54

Ordering table (Read heads and actuators each incl. 2 safety screws M4 x 14)

Circuit diagram not actuated	Assured switch-on distance s_{ao} [mm]	Assured switch-off distance s_{ar} [mm]	Cable type	Cable length [m]	Read head Order no./item	Actuator Order no./item
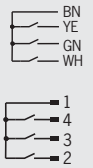	6	17	**V** PVC	**5**	**092023** CMS-R-BXO-05V	**092025** CMS-M-BH
			P PUR	**5**	**103867** CMS-R-BXO-05P	
			Plug connectors **M8**		**100755** CMS-R-BXO-SC	
	6	17	**V** PVC	**5**	**092024** CMS-R-BXP-05V	
			P PUR	**5**	**103868** CMS-R-BXP-05P	
			Plug connectors **M8**		**100756** CMS-R-BXP-SC	

Technical data read heads and actuators design B

Parameter	Value min.	Value typ.	Value max.	Unit
Read heads				
Housing material	Reinforced PPS			
Ambient temperature	- 20	-	+60	°C
Degree of protection according to EN 60529	IP 67			
Installation position	Any, alignment with actuator should be kept in mind (markings)			
Connection type	Molded cable with crimped ferrules / plug connector M8			
Switching current	24			V
Switching current I_e	-	-	0.5	A
Method of operation	Magnetic, reed contact			
Mechanical life	100 x 10^6 operating cycles			
Vibration resistance	10 ... 55 Hz, amplitude 1 mm			
Shock resistance	30 g / 11 ms			
EMC compliance	According to EN 60947-5-3			
Center offset m from actuator	± 2.5 mm at a distance of s = 3 mm			
Switch-on distance S_{ao}	See ordering table and operating diagrams			
Switch-off distance S_{ar}				
Contact elements				
Actuator				
Housing material	Reinforced PPS			
Ambient temperature	- 20	-	+60	°C
Degree of protection according to EN 60529	IP 67			
Installation position	Any, alignment with read head should be kept in mind (markings)			
Method of operation	Magnetic			
Vibration resistance	10 ... 55 Hz, amplitude 1 mm			
Shock resistance	30 g / 11 ms			
Center offset m from read head	± 2.5 mm at a distance of s = 3 mm			
Switch-on distance S_{ao}	See ordering table and operating diagrams			
Switch-off distance S_{ar}				

Operating diagrams design B

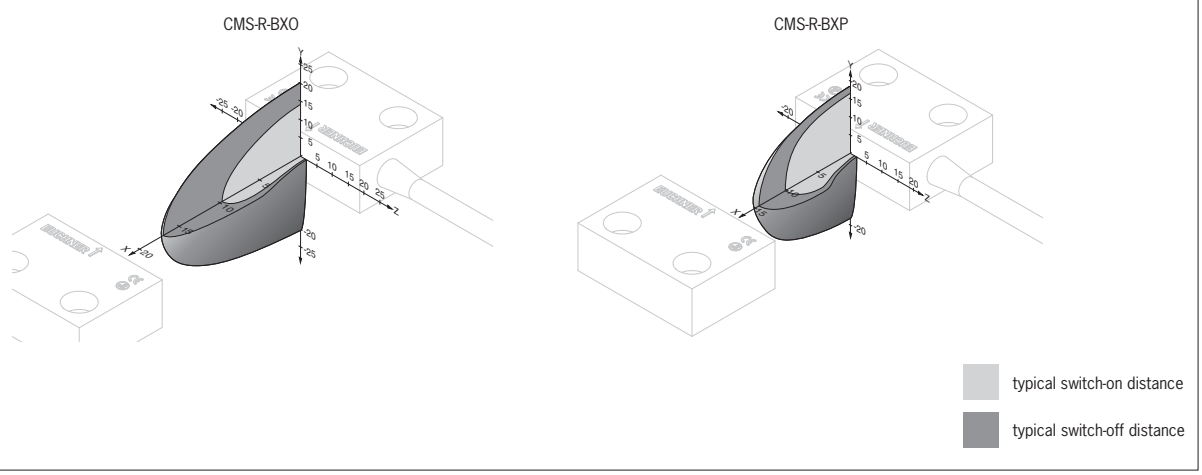

Read heads and actuators design C

- **In combination with evaluation units CMS-E-AR**
- **Cylindrical version M25**
- **With connection cable or plug connector M8**

Alignment of read head and actuator

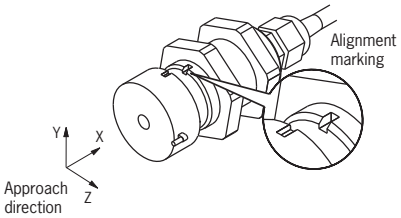

Read heads design C

Dimension drawing

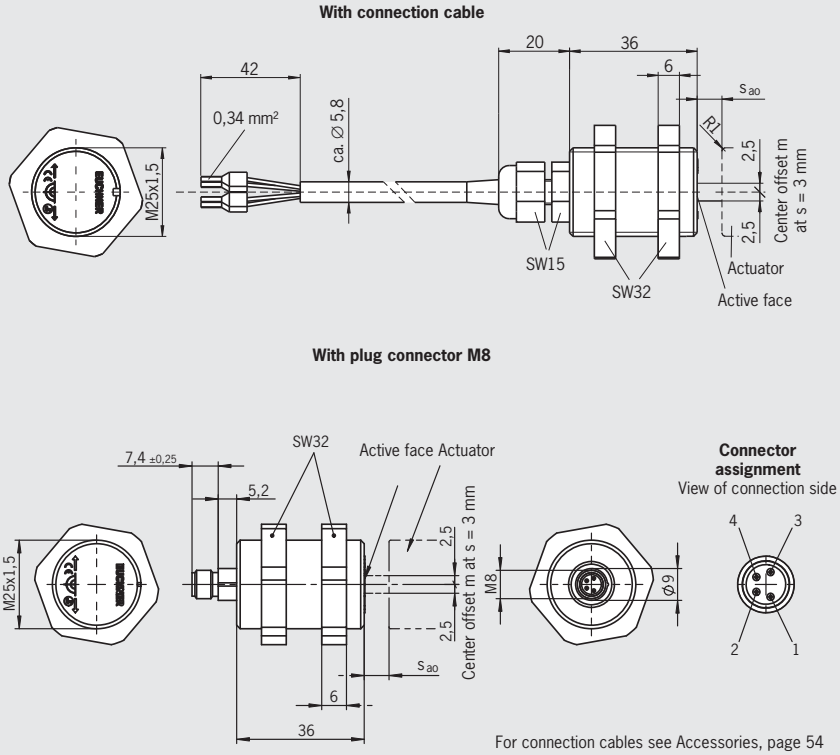

For connection cables see Accessories, page 54

Actuator design C

Dimension drawing

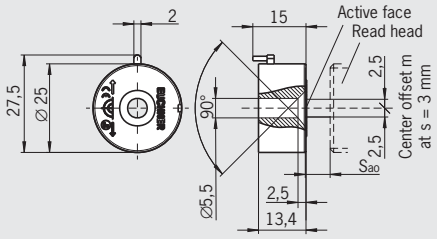

Ordering table (Actuator incl. 1 screw M5 x 25)

Circuit diagram not actuated	Assured switch-on distance s_{ao} [mm]	Assured switch-off distance s_{ar} [mm]	Cable type	Cable length [m]	Read head Order no./item	Actuator Order no./item
BN YE GN WH / 1 4 3 2	7	16	**V** PVC	**3**	**084574** CMS-R-CXA-03V	**084577** CMS-M-CA
				5	**085739** CMS-R-CXA-05V	
			P PUR	**5**	**103870** CMS-R-CXA-05P	
			Plug connectors **M8**		**103965** CMS-R-CXA-SC	
BN WH / 1 2	7	16	**V** PVC	**3**	**084576** CMS-R-CXB-03V	
				5	**085740** CMS-R-CXB-05V	
			P PUR	**5**	**103871** CMS-R-CXB-05P	
			Plug connectors **M8**		**103966** CMS-R-CXB-SC	

Technical data read heads and actuators design C

Parameter	Value min.	typ.	max.	Unit
Read heads				
Housing material	Reinforced PPS			
Ambient temperature	- 20	-	+60	°C
Degree of protection according to EN 60529	IP 67			
Installation position	Any, alignment with actuator should be kept in mind (markings)			
Connection type	Molded cable with crimped ferrules / plug connector M8			
Switching current	24			V
Switching current I_e	-	-	0.5	A
Method of operation	Magnetic, reed contact			
Mechanical life	100 x 10^6 operating cycles			
Vibration resistance	10 ... 55 Hz, amplitude 1 mm			
Shock resistance	30 g / 11 ms			
EMC compliance	According to EN 60947-5-3			
Center offset m from actuator	± 2.5 mm at a distance of s = 3 mm			
Switch-on distance S_{ao}	See ordering table and operating diagrams			
Switch-off distance S_{ar}				
Contact elements				
Actuator				
Housing material	Reinforced PPS			
Ambient temperature	- 20	-	+60	°C
Degree of protection according to EN 60529	IP 67			
Installation position	Any, alignment with read head should be kept in mind (markings)			
Method of operation	Magnetic			
Vibration resistance	10 ... 55 Hz, amplitude 1 mm			
Shock resistance	30 g / 11 ms			
Center offset m from read head	± 2.5 mm at a distance of s = 3 mm			
Switch-on distance S_{ao}	See ordering table and operating diagrams			
Switch-off distance S_{ar}				

Operating diagrams design C

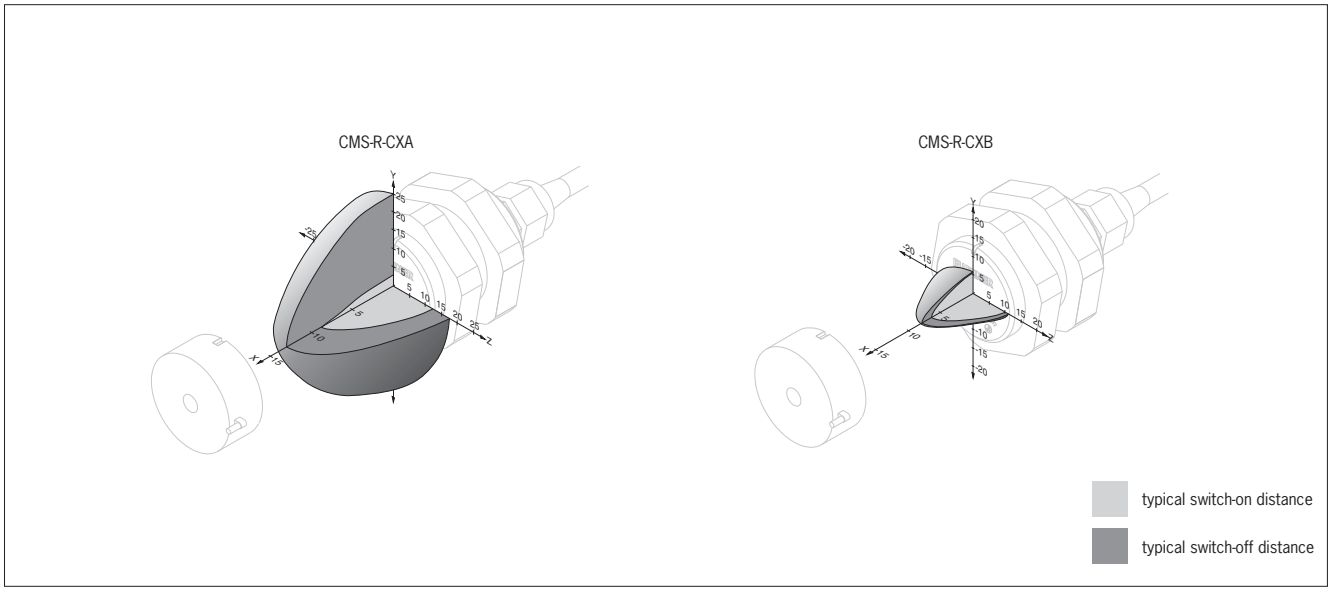

Read heads and actuators design E

- **In combination with evaluation units CMS-E-AR**
- **Cylindrical version M30**
- **With connection cable or plug connector M8**

Alignment of read head and actuator

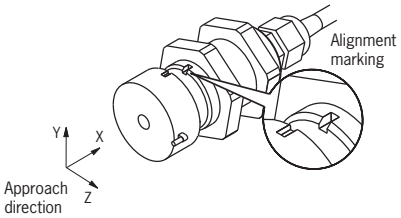

Read heads design E

Dimension drawing

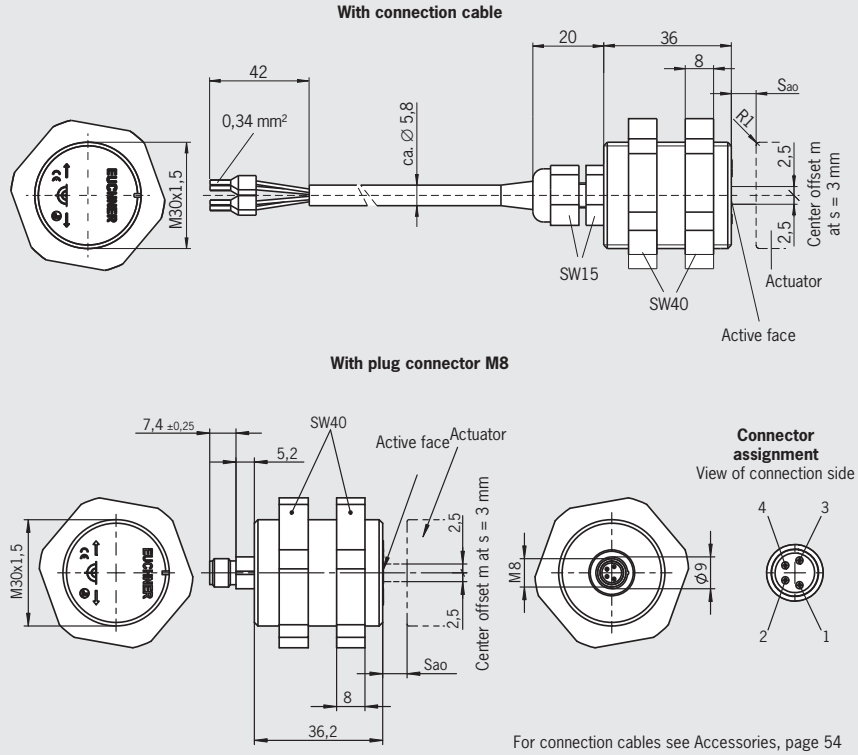

For connection cables see Accessories, page 54

Actuator design E

Dimension drawing

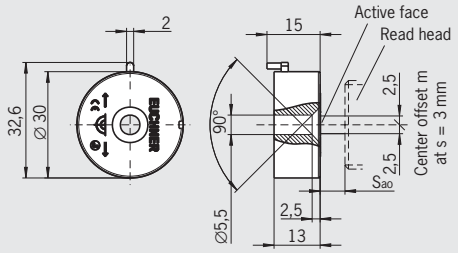

Ordering table (Actuator incl. 1 screw M5 x 25)

Circuit diagram not actuated	Assured switch-on distance s_{ao} [mm]	Assured switch-off distance s_{ar} [mm]	Cable type	Cable length [m]	Read head Order no./item	Actuator Order no./item
BN, YE, GN, WH; 1, 4, 3, 2	7	16	**V** PVC	**3**	**085633** CMS-R-EXL-03V	**085636** CMS-M-EF
				5	**085742** CMS-R-EXL-05V	
			P PUR	**5**	**103873** CMS-R-EXL-05P	
			Plug connectors **M8**		**103968** CMS-R-EXL-SC	
BN, WH; 1, 2	7	16	**V** PVC	**3**	**085635** CMS-R-EXN-03V	
				5	**085744** CMS-R-EXN-05V	
			P PUR	**5**	**103875** CMS-R-EXN-05P	
			Plug connectors **M8**		**103970** CMS-R-EXN-SC	

Technical data read heads and actuators design E

Parameter	Value min.	Value typ.	Value max.	Unit
Read heads				
Housing material	Reinforced PPS			
Ambient temperature	- 20	-	+60	°C
Degree of protection according to EN 60529	IP 67			
Installation position	Any, alignment with actuator should be kept in mind (markings)			
Connection type	Molded cable with crimped ferrules / plug connector M8			
Switching current	24			V
Switching current I_e	-	-	0.5	A
Method of operation	Magnetic, reed contact			
Mechanical life	100 x 10^6 operating cycles			
Vibration resistance	10 ... 55 Hz, amplitude 1 mm			
Shock resistance	30 g / 11 ms			
EMC compliance	According to EN 60947-5-3			
Center offset m from actuator	± 2.5 mm at a distance of s = 3 mm			
Switch-on distance S_{ao}	See ordering table and operating diagrams			
Switch-off distance S_{ar}				
Contact elements				
Actuator				
Housing material	Reinforced PPS			
Ambient temperature	- 20	-	+60	°C
Degree of protection according to EN 60529	IP 67			
Installation position	Any, alignment with read head should be kept in mind (markings)			
Method of operation	Magnetic			
Vibration resistance	10 ... 55 Hz, amplitude 1 mm			
Shock resistance	30 g / 11 ms			
Center offset m from read head	± 2.5 mm at a distance of s = 3 mm			
Switch-on distance S_{ao}	See ordering table and operating diagrams			
Switch-off distance S_{ar}				

Operating diagrams design E

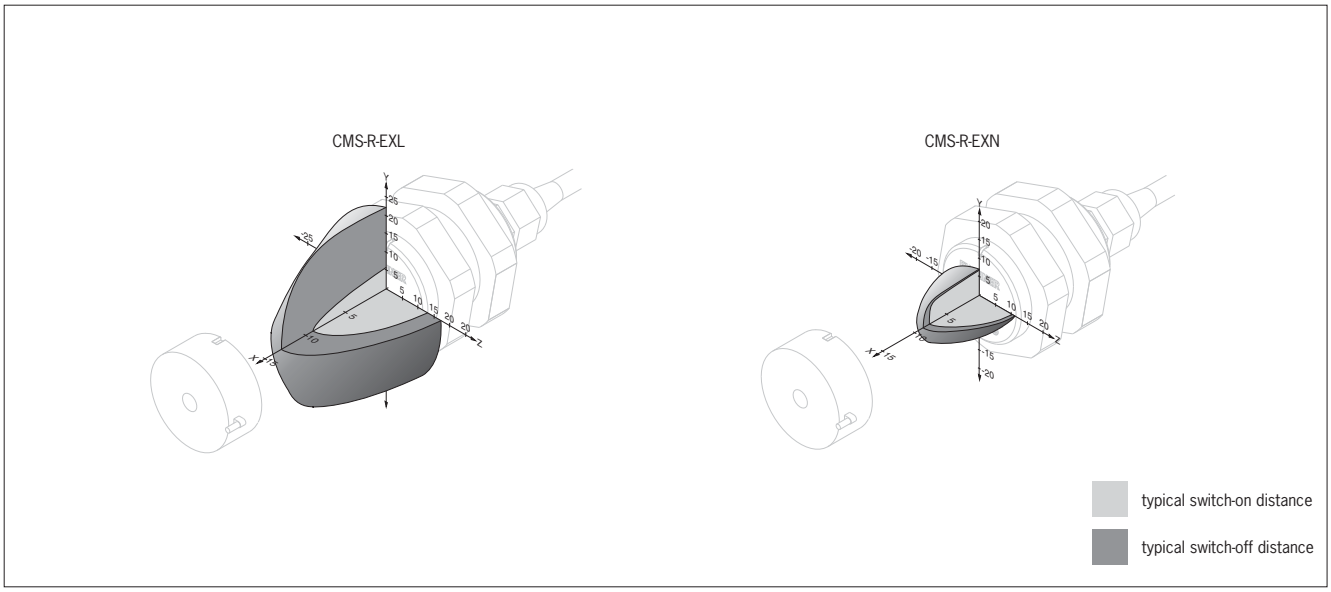

Selection table for non-contact safety system CMS-E-BR/CMS-E-ER/CMS-E-FR

Evaluation units	Connection	Design	Read head contact assembly	Assured switch-on distance S_{ao} [mm]	Assured switch-on distance S_{ar} [mm]	Number of outputs Read heads		Category/ PL according to EN ISO 13849-1	Read head	Actuator
CMS-E-BR CMS-E-ER CMS-E-FR Page 24 - 29	Hard-wired encapsulated connection cable/plug connector on the read head	Design A Page 34		6	31	CMS-E-BR	1	4 / PL e	CMS-R-AXH...	CMS-M-AC
							2 ... 4	3 / PL d		
						CMS-E-ER/CMS-E-FR	1	4 / PL e		
							2 ... 30	3 / PL d		
		Design B Page 36		3	12	CMS-E-BR	1	4 / PL e	CMS-R-BXI...	CMS-M-BD
							2 ... 4	3 / PL d		
						CMS-E-ER/CMS-E-FR	1	4 / PL e		
							2 ... 30	3 / PL d		
		Design C M25 Page 38		6	14	CMS-E-BR	1	4 / PL e	CMS-R-CXC...	CMS-M-CA
							2 ... 4	3 / PL d		
						CMS-E-ER/CMS-E-FR	1	4 / PL e		
							2 ... 30	3 / PL d		
		Design E M30 Page 40		6	17	CMS-E-BR	1	4 / PL e	CMS-R-EXM...	CMS-M-EF
							2 ... 4	3 / PL d		
						CMS-E-ER/CMS-E-FR	1	4 / PL e		
							2 ... 30	3 / PL d		

Evaluation unit CMS-E-BR

- **Up to 4 read heads can be connected**
- **1 safety contact**
- **1 auxiliary contact**
- **1 feedback loop can be connected**

Functional description
The evaluation unit CMS-E-BR is suitable for the direct connection of up to 4 read heads.

Category/PL according to EN ISO 13849-1
- Category 3/PL d with more than one read head connected
- Category 4/PL e with only one read head connected

Note:
At low approach speeds in the z direction, the time between the switching the reed contacts must not be more than 150 ms.

Evaluation unit CMS-E-BR

Cat. 3 / PLd | Cat. 4 / PLe

Dimension drawing

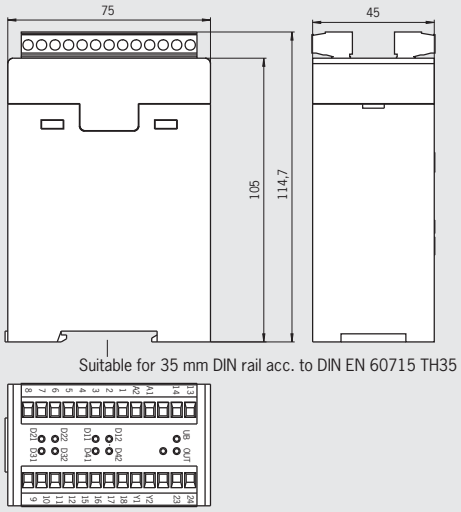

Block diagram

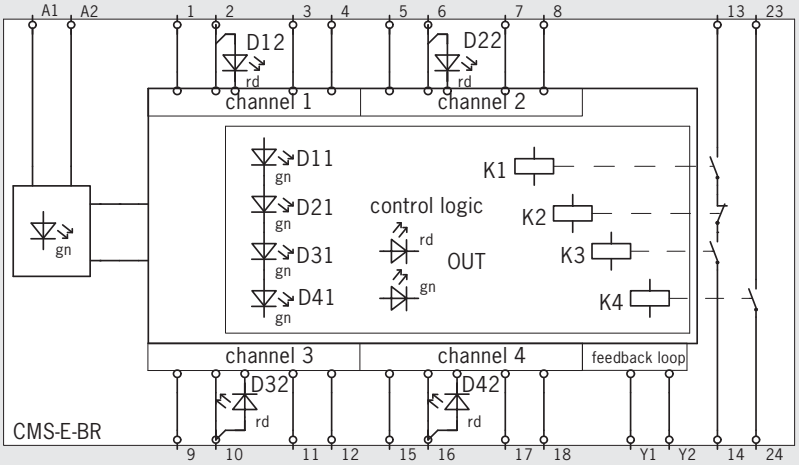

LED displays

Actuator \ LED	U_B Operating voltage green	Dx1 green	Dx2 red	OUT green	OUT red
in the operating distance [1]	●	●		●	
not in the operating distance [2]	●		●		●
not completely in the operating distance	●	●	●		●

1) NC contact in the read head is open, NO contact in the read head is closed.
All NO contacts in the previous channels are closed.
2) NC contact in the read head is open, NO contact in the read head is closed.

Ordering table

Designation	Scope of delivery	Order No. / Item
CMS-E-BR	Evaluation unit Four 2-pin jumpers	**085537** CMS-E-BR

Technical data evaluation unit CMS-E-BR

Parameter	Value min.	typ.	max.	Unit
Housing material	Polyamide PA6.6			
Dimensions	114.7 x 75 x 45			mm
Weight	0.24			kg
Ambient temperature	0	-	+50	°C
Storage temperature	-25	-	+70	°C
Degree of protection according to EN 60529	Terminals IP 20 / housing IP 40			
Degree of contamination	2			
Mounting	DIN rail 35 mm according to DIN EN 60715 TH35			
Number of read heads	1 ... 4			
Connection	Plug-in connection terminals			
Operating voltage U_B	24 ±10% [1]			V DC
Internal fuse (operating voltage) (automatically resetting fuse PTC)	0.5			A
Switching voltage U	-	-	250	V AC
Current consumption	-	250		mA
Switching current I at 24 V	13	-	3000	mA
Breaking capacity P	-	-	750	VA
External contact fuse (safety circuit)	3 A gG			
Safety contact	1			
Auxiliary contact	1			
Utilization category according to EN 60947-5-1		I_e [2]	U_e [2]	
	AC-1	3 A	250 V	
	AC-1	3 A	24 V	
	AC-15	1 A	250 V	
	AC-15	1 A	24 V	
	DC-13	3 A	24 V	
Switching load acc. to UL Class 2	Input: 24 V AC/DC Output: 30 V AC / 24 V DC			
Rated insulation voltage U_i	250			V
Vibration resistance	According to EN 60947-5-2			
Mechanical operating cycles relays	30 x 10^6			
EMC compliance	According to EN 60947-5-3			
Risk time according to EN 60947-5-3	20			ms
Reliability values according to EN ISO 13849-1				
as a function of the switching current at 24 V DC	≤ = 0.1 A	≤ = 1 A	≤ = 3A	
Number of switching cycles/year	< 100,000	< 18,500	< 9,000	
Mission time	20			years
Category 1 read head >1 read head	4 3			
Performance Level (PL) 1 read head >1 read head	e d			
PFH_d 1 read head >1 read head	2.5 x 10^{-8} 1.0 x 10^{-7}			

1) All the electrical connections must either be isolated from the mains supply by a safety transformer according to EN 61558-2-6 with limited output voltage in the event of a fault, or by other equivalent isolation measures.
2) I_e = max. switching current per contact, U_e = switching voltage

Evaluation unit CMS-E-ER

- **Up to 30 read heads can be connected**
- **2 safety contacts**
- **1 auxiliary contact**
- **1 feedback loop can be connected**
- **Start automatic/monitored/not monitored**

Functional description
The evaluation unit CMS-E-ER is suitable for the direct connection of up to 30 read heads.

Category/PL according to EN ISO 13849-1
- Category 3/PL d with more than one read head connected
- Category 4/PL e with only one read head connected

Note:
At low approach speeds in the z direction, the time between the switching the reed contacts must not be more than 0.6 ms.

Evaluation unit CMS-E-ER Cat. 3 PLd / Cat. 4 PLe

Dimension drawing

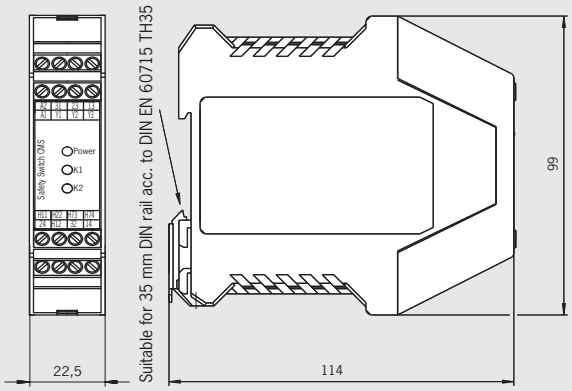

Block diagram

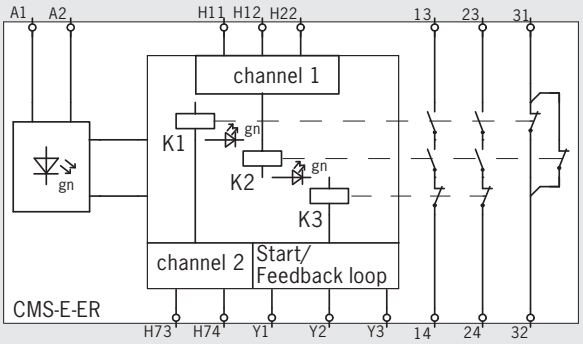

LED displays

LED / Actuator	U_B Operating voltage green	K1 Channel 1 green	K2 Channel 2 green
in the operating distance	●	●	●
none in the operating distance	●		
not completely in the operating distance	●	● or ●	

Ordering table

Designation	Scope of delivery	Order No. / Item
Evaluation unit CMS-E-ER	Evaluation unit One 2-pin jumper	**099182** CMS-E-ER

Technical data evaluation unit CMS-E-ER

Parameter	Value min.	typ.	max.	Unit
Housing material	Polyamide PA6.6			
Dimensions	114 x 99 x 22.5			mm
Weight	0.22			kg
Ambient temperature	0	-	+55	°C
Storage temperature	-25	-	+70	°C
Degree of protection according to EN 60529	Terminals IP 20 / housing IP 40			
Degree of contamination	2			
Mounting	DIN rail 35 mm according to DIN EN 60715 TH35			
Number of read heads	1 ... 30			
Connection	Connection terminals			
Operating voltage U_B	24 ±10% [1]			V DC
Internal fuse (operating voltage) (automatically resetting fuse PTC)	750			mA
Safety contacts	2 NO contacts			
Switching voltage U	-	-	240	V AC
Current consumption at DC 24 V	10	-	120	mA
Switching current I at 24 V	-	-	3	A
Switching current I at 24 V	10	-	-	mA
Breaking capacity P	-	-	720	VA
External contact fuse (safety circuit acc. to EN IEC 60269-1)	4 A gG			
Auxiliary contact	1 NC contact			
Switching current I at 24 V	-	-	1.5	A
Utilization category according to EN 60947-5-1		I_e [2]	U_e [2]	
	AC-1	3 A	230 V	
	AC-1	3 A	24 V	
	AC-15	0.9 A	240 V	
	AC-15	0.9 A	24 V	
	DC-13	1.5 A	24 V	
Switching load acc. to UL Class 2	Input: 24 V AC/DC Output: 30 V AC / 24 V DC			
Rated insulation voltage U_i	250			V
Vibration resistance	According to EN 60947-5-2			
Mechanical operating cycles relays	10×10^6			
EMC compliance	According to EN 60947-5-3			
Risk time according to EN 60947-5-3	20			ms
Reliability values according to EN ISO 13849-1				
as a function of the switching current at 24 V DC	≤ = 0.1 A		≤ = 1 A	
Number of switching cycles/year	< 166,000		< 70,000	
Mission time	20			years
Category 1 read head >1 read head	4 3			
Performance Level (PL) 1 read head >1 read head	e d			
PFH_d 1 read head >1 read head	2.5×10^{-8} 1.0×10^{-7}			

1) All the electrical connections must either be isolated from the mains supply by a safety transformer according to EN 61558-2-6 with limited output voltage in the event of a fault, or by other equivalent isolation measures.
2) I_e = max. switching current per contact, U_e = switching voltage

Evaluation unit CMS-E-FR

- **Up to 30 read heads can be connected**
- **2 safety contacts**
- **1 auxiliary contact**
- **6 monitoring outputs**
- **1 feedback loop can be connected**
- **Start automatic/monitored/not monitored**

Functional description
The evaluation unit CMS-E-FR is suitable for the direct connection of up to 30 read heads.

Category/PL according to EN ISO 13849-1
- Category 3/PL d with more than one read head connected
- Category 4/PL e with only one read head connected

Note:
At low approach speeds in the z direction, the time between the switching the reed contacts must not be more than 0.6 ms.

Evaluation unit CMS-E-FR Cat. 3 / PLd | Cat. 4 / PLe

Dimension drawing

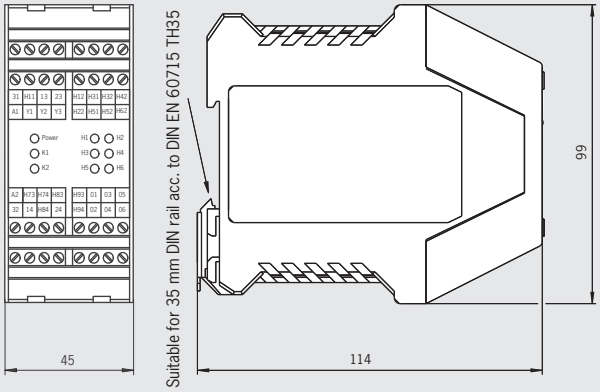

Block diagram

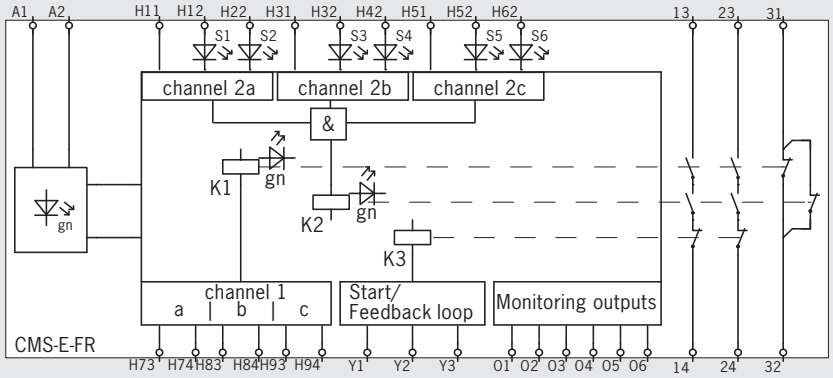

LED displays

LED / Actuator	U_B Operating voltage green	K1 Channel 1 green	K2 Channel 2 green	H1 ... H6 green
in the operating distance	●	●	●	● 1)
none in the operating distance	●			
not completely in the operating distance	●	● or ●		
at least one not in the operating distance	●			● 1)

1) The LED indicator shows which actuators are in the operating distance.

Ordering table

Designation	Scope of delivery	Order No. / Item
Evaluation unit CMS-E-FR	Evaluation unit Two 3-pin jumpers	**099258** CMS-E-FR

Technical data evaluation unit CMS-E-FR

Parameter	Value min.	Value typ.	Value max.	Unit
Housing material		Polyamide PA6.6		
Dimensions		114 x 99 x 45		mm
Weight		0.3		kg
Ambient temperature	0	-	+55	°C
Storage temperature	-25	-	+70	°C
Degree of protection according to EN 60529		Terminals IP 20 / housing IP 40		
Degree of contamination		2		
Mounting		DIN rail 35 mm according to DIN EN 60715 TH35		
Number of read heads		1 ... 30		
Connection		Connection terminals		
Operating voltage U_B		24 ±10% [1]		V DC
Internal fuse (operating voltage) (automatically resetting fuse PTC)		750		mA
Safety contacts		2 NO contacts		
Switching voltage U	-	-	240	V AC
Current consumption at DC 24 V	10	-	120	mA
Switching current I at 24 V	-	-	3	A
Switching current I at 24 V	10	-	-	mA
Breaking capacity P	-	-	720	VA
External contact fuse (safety circuit acc. to EN IEC 60269-1)		4 A gG		
Auxiliary contact		1 NC contact		
Switching current I at 24 V	-	-	1.5	A
Monitoring output O1 ... O6		DC 24 V / 50 mA per contact		
Utilization category according to EN 60947-5-1		I_e [2]	U_e [2]	
	AC-1	3 A	230 V	
	AC-1	3 A	24 V	
	AC-15	0.9 A	240 V	
	AC-15	0.9 A	24 V	
	DC-13	1.5 A	24 V	
Switching load acc. to UL Class 2		Input: 24 V AC/DC Output: 30 V AC / 24 V DC		
Rated insulation voltage U_i		250		V
Vibration resistance		According to EN 60947-5-2		
Mechanical operating cycles relays		10×10^6		
EMC compliance		According to EN 60947-5-3		
Risk time according to EN 60947-5-3		20		ms
Reliability values according to EN ISO 13849-1				
as a function of the switching current at 24 V DC	≤ = 0.1 A		≤ = 1 A	
Number of switching cycles/year	< 166,000		< 70,000	
Mission time		20		years
Category 1 read head >1 read head		4 3		
Performance Level (PL) 1 read head >1 read head		e d		
PFH_d 1 read head >1 read head		2.5×10^{-8} 1.0×10^{-7}		

1) All the electrical connections must either be isolated from the mains supply by a safety transformer according to EN 61558-2-6 with limited output voltage in the event of a fault, or by other equivalent isolation measures.
2) I_e = max. switching current per contact, U_e = switching voltage

Connection examples evaluation unit CMS-E-BR

Connection example 1

- One read head on one evaluation unit CMS-E-BR (without feedback loop)

Cat. 4 / PLe

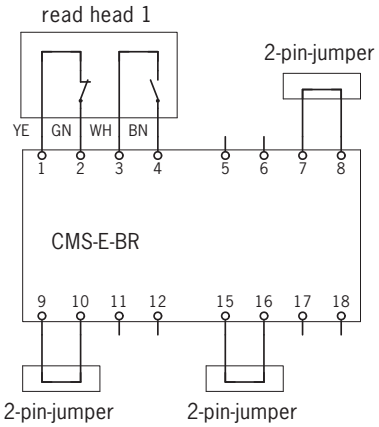

Connection examples for automatic start

- With feedback loop

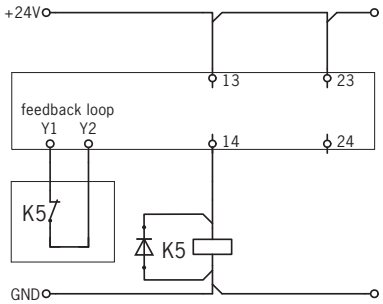

- Without feedback loop

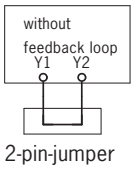

Connection example 2

- Two read heads on one evaluation unit CMS-E-BR (without feedback loop)

Cat. 3 / PLd

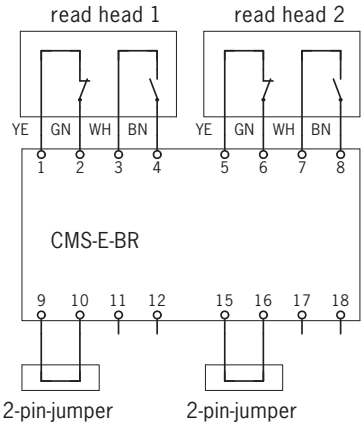

Connection example 3

- Four read heads on one evaluation unit CMS-E-BR (without feedback loop)

Cat. 3 / PLd

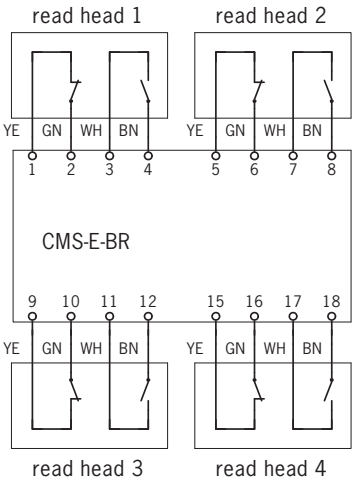

Notes

The following applies to all the illustrations:
Evaluation unit electrically isolated, actuator not in the operating distance.

Connection examples evaluation unit CMS-E-ER

Connection example 1

▸ One read head on one evaluation unit CMS-E-ER

Cat. 4 / PLe

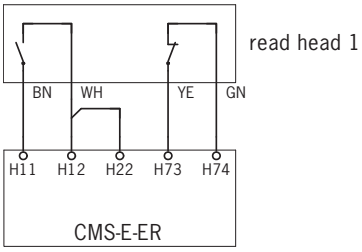

Connection example 2

▸ Two read heads on one evaluation unit CMS-E-ER

Cat. 3 / PLd

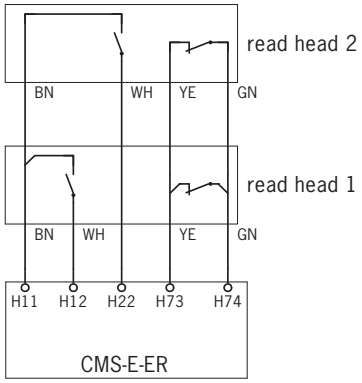

Connection example 3

▸ More than 2 up to 30 read heads on one evaluation unit CMS-E-ER

Cat. 3 / PLd

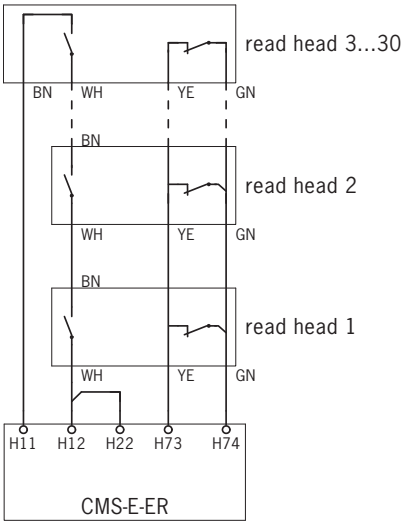

Connection examples for automatic start

▸ With feedback loop

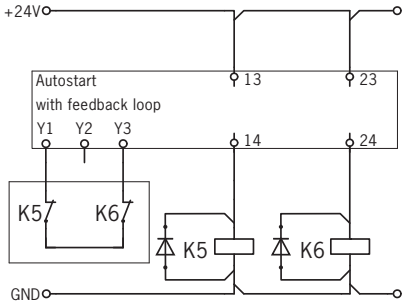

▸ Without feedback loop

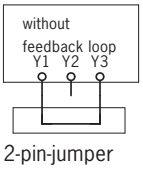

Connection examples for monitored start

The safety contacts are closed only when the start button is released

▸ With feedback loop

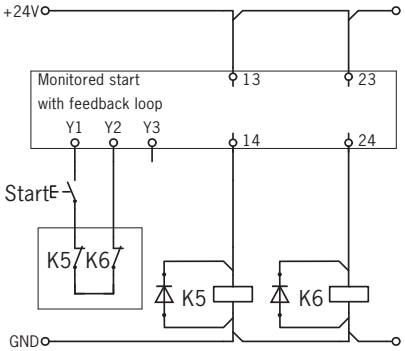

▸ Without feedback loop

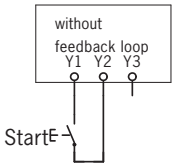

Connection examples for unmonitored start

▸ With feedback loop

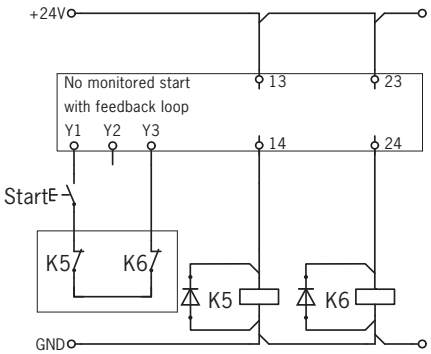

▸ Without feedback loop

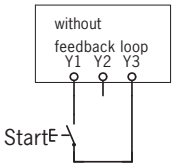

Notes

The following applies to all the illustrations:
Evaluation unit electrically isolated, actuator not in the operating distance.

Connection examples evaluation unit CMS-E-FR

Connection example 1

▸ One read head on one evaluation unit CMS-E-FR

Cat. 4 / PLe

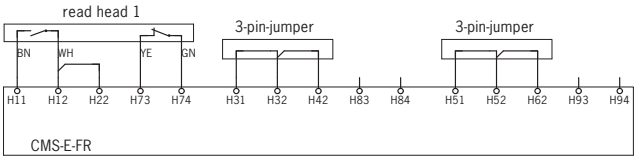

Connection examples for automatic start

▸ With feedback loop

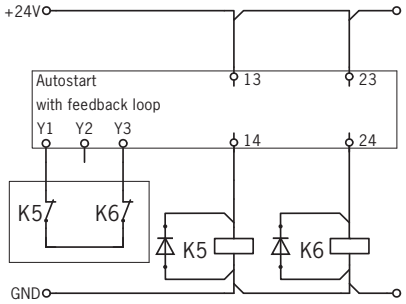

▸ Without feedback loop

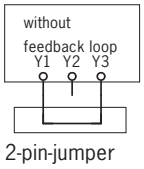

Connection example 2

▸ Three read heads on one evaluation unit CMS-E-FR

Cat. 3 / PLd

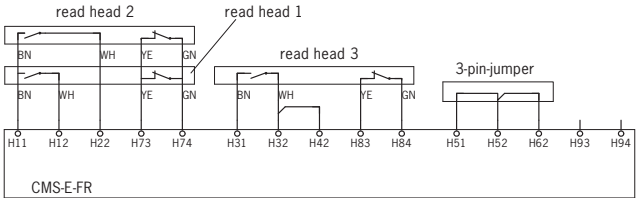

Connection examples for monitored start

The safety contacts are closed only when the start button is released

▸ With feedback loop

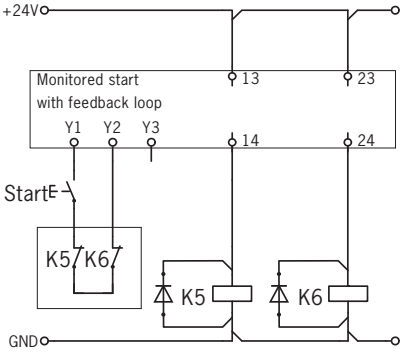

▸ Without feedback loop

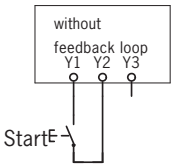

Connection example 3

▸ Six read heads on one evaluation unit CMS-E-FR

Cat. 3 / PLd

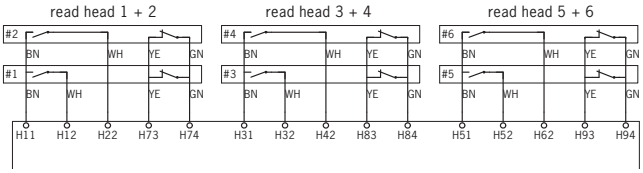

Connection examples for unmonitored start

▸ With feedback loop

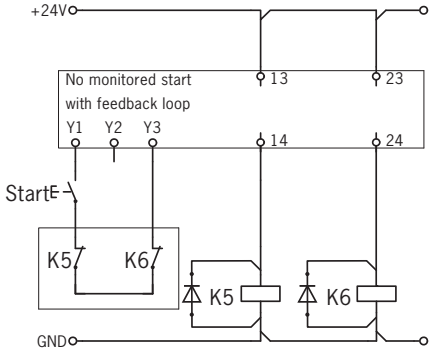

▸ Without feedback loop

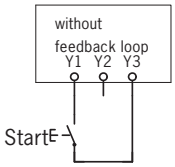

Read heads and actuators design A

- **In combination with evaluation units CMS-E-BR/CMS-E-ER/CMS-E-FR**
- **Cube-shaped version 88 x 25 mm**
- **With connection cable or plug connector M8**

Alignment of read head and actuator

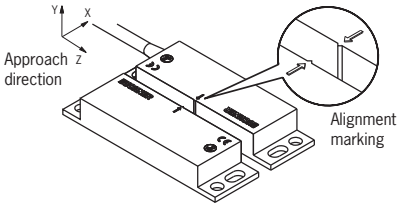

Note:
The dimensions of the actuators are the same as those of the read heads, although the former have no connection cable or plug connector.

Read heads/actuators design A

Dimension drawing

With connection cable

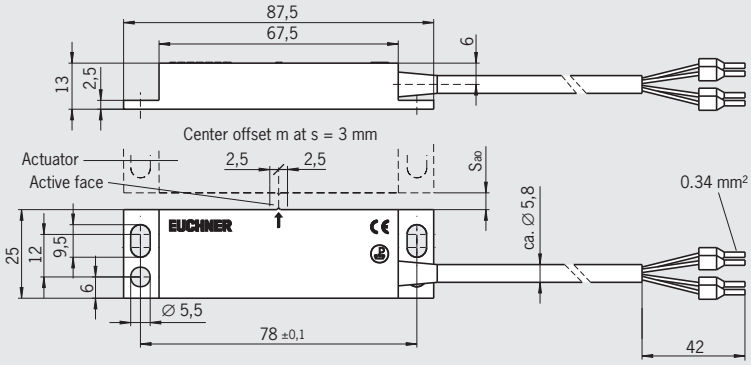

With plug connector M8

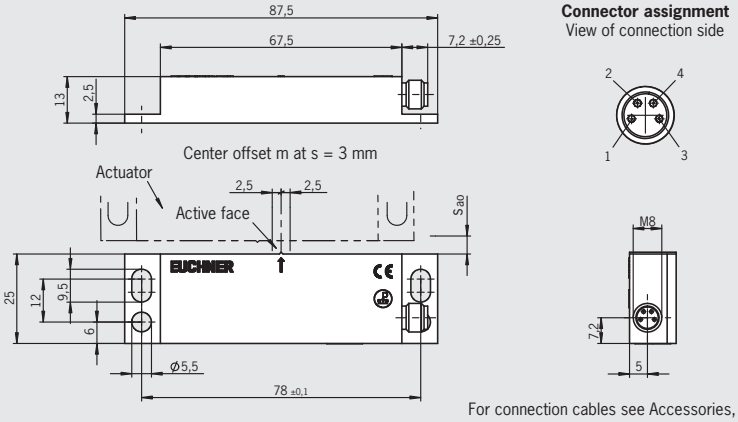

Connector assignment
View of connection side

For connection cables see Accessories, page 54

Ordering table (Read heads and actuators each incl. 2 safety screws M4 x 14)

Circuit diagram not actuated	Assured switch-on distance s_{ao} [mm]	Assured switch-off distance s_{ar} [mm]	Cable type	Cable length [m]	Read head Order no./item	Actuator Order no./item
BN, WH, GN, YE; 1, 2, 3, 4	6	31	**V** PVC	**3**	**084587** CMS-R-AXH-03V	**084592** CMS-M-AC
				5	**085736** CMS-R-AXH-05V	
			P PUR	**5**	**103862** CMS-R-AXH-05P	
			Plug connectors **M8**		**100745** CMS-R-AXH-SC	

Technical data read heads and actuators design A

Parameter	Value min.	typ.	max.	Unit
Read heads				
Housing material	Reinforced PPS			
Ambient temperature	- 20	-	+60	°C
Degree of protection according to EN 60529	IP 67			
Installation position	Any, alignment with read head should be kept in mind (markings)			
Connection type	Molded cable with crimped ferrules / plug connector M8			
Switching current	24			V
Switching current I_e	-	-	0.5	A
Method of operation	Magnetic, reed contact			
Mechanical life	100 x 10^6 operating cycles			
Vibration resistance	10 ... 55 Hz, amplitude 1 mm			
Shock resistance	30 g / 11 ms			
EMC compliance	According to EN 60947-5-3			
Center offset m from actuator	± 2.5 mm at a distance of s = 3 mm			
Switch-on distance S_{ao}	See ordering table and operating diagrams			
Switch-off distance S_{ar}				
Contact elements				
Actuator				
Housing material	Reinforced PPS			
Ambient temperature	- 20	-	+60	°C
Degree of protection according to EN 60529	IP 67			
Installation position	Any, alignment with read head should be kept in mind (markings)			
Method of operation	Magnetic			
Vibration resistance	10 ... 55 Hz, amplitude 1 mm			
Shock resistance	30 g / 11 ms			
Center offset m from read head	± 2.5 mm at a distance of s = 3 mm			
Switch-on distance S_{ao}	See ordering table and operating diagrams			
Switch-off distance S_{ar}				

Operating diagrams design A

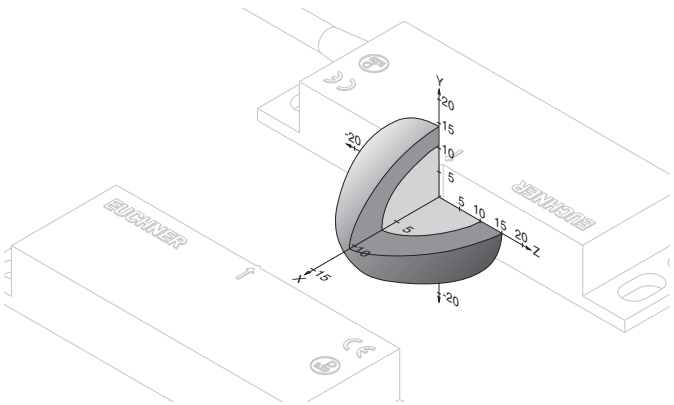

typical switch-on distance

typical switch-off distance

Read heads and actuators design B

- **In combination with evaluation units CMS-E-BR/CMS-E-ER/CMS-E-FR**
- **Cube-shaped version 36 x 26 mm**
- **With connection cable or plug connector M8**

Alignment of read head and actuator

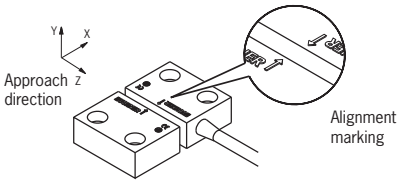

Note:
The dimensions of the actuators are the same as those of the read heads, although the former have no connection cable or plug connector.

Read heads/actuators design B

Dimension drawing

With connection cable

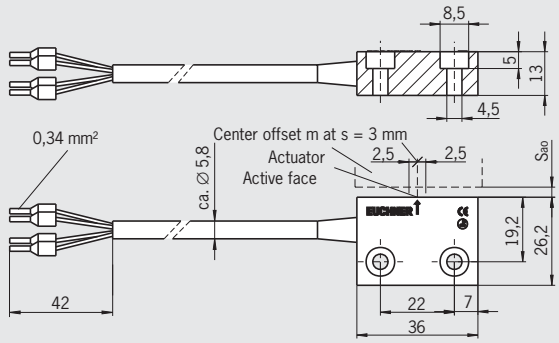

With plug connector M8

Connector assignment
View of connection side

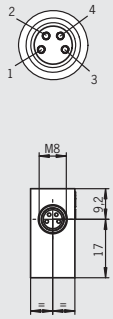

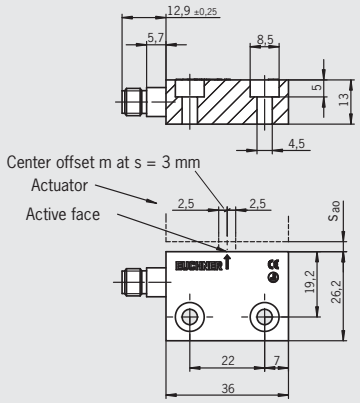

For connection cables see Accessories, page 54

Ordering table (Read heads and actuators each incl. 2 safety screws M4 x 14)

Circuit diagram not actuated	Assured switch-on distance s_{ao} [mm]	Assured switch-off distance s_{ar} [mm]	Cable type	Cable length [m]	Read head Order no./item	Actuator Order no./item
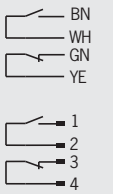	3	12	**V** PVC	**3**	**085530** CMS-R-BXI-03V	**085531** CMS-M-BD
				5	**085737** CMS-R-BXI-05V	
			P PUR	**5**	**103866** CMS-R-BXI-05P	
				7	**115117** CMS-R-BXI-07P	
			Plug connectors **M8**		**100696** CMS-R-BXI-SC	

Technical data read heads and actuators design B

Parameter	Value min.	Value typ.	Value max.	Unit
Read heads				
Housing material	Reinforced PPS			
Ambient temperature	- 20	-	+60	°C
Degree of protection according to EN 60529	IP 67			
Installation position	Any, alignment with read head should be kept in mind (markings)			
Connection type	Molded cable with crimped ferrules / plug connector M8			
Switching current	24			V
Switching current I_e	-	-	0.5	A
Method of operation	Magnetic, reed contact			
Mechanical life	100 x 10^6 operating cycles			
Vibration resistance	10 ... 55 Hz, amplitude 1 mm			
Shock resistance	30 g / 11 ms			
EMC compliance	According to EN 60947-5-3			
Center offset m from actuator	± 2.5 mm at a distance of s = 3 mm			
Switch-on distance S_{ao}	See ordering table and operating diagrams			
Switch-off distance S_{ar}				
Contact elements				
Actuator				
Housing material	Reinforced PPS			
Ambient temperature	- 20	-	+60	°C
Degree of protection according to EN 60529	IP 67			
Installation position	Any, alignment with read head should be kept in mind (markings)			
Method of operation	Magnetic			
Vibration resistance	10 ... 55 Hz, amplitude 1 mm			
Shock resistance	30 g / 11 ms			
Center offset m from read head	± 2.5 mm at a distance of s = 3 mm			
Switch-on distance S_{ao}	See ordering table and operating diagrams			
Switch-off distance S_{ar}				

Operating diagrams design B

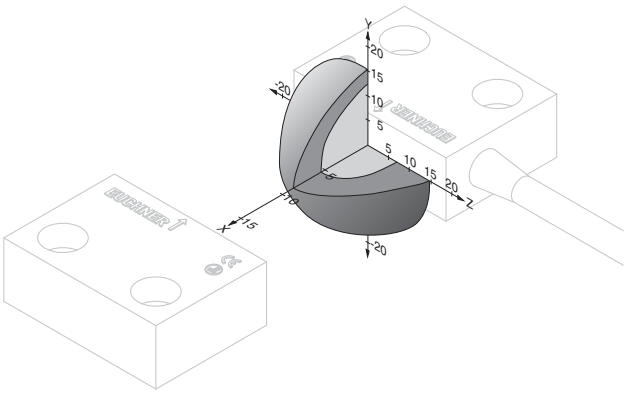

typical switch-on distance

typical switch-off distance

Read heads and actuators design C

- **In combination with evaluation units CMS-E-BR/CMS-E-ER/CMS-E-FR**
- **Cylindrical version M25**
- **With connection cable or plug connector M8**

Alignment of read head and actuator

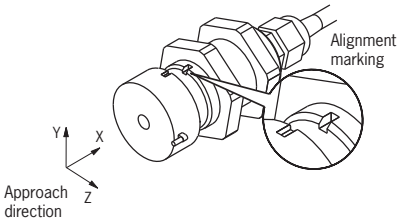

Read heads design C

Dimension drawing

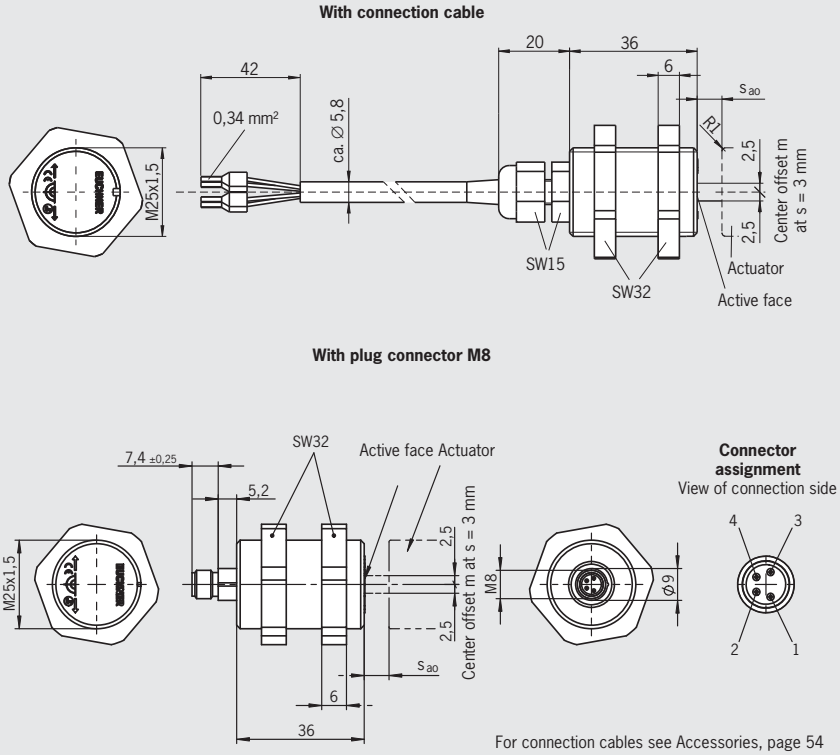

For connection cables see Accessories, page 54

Actuator design C

Dimension drawing

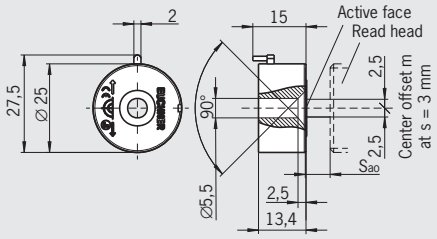

Ordering table (Actuator incl. 1 screw M5 x 25)

Circuit diagram not actuated	Assured switch-on distance s_{ao} [mm]	Assured switch-off distance s_{ar} [mm]	Cable type	Cable length [m]	Read head Order no./item	Actuator Order no./item
BN, WH, GN, YE; 1, 2, 3, 4	6	14	**V** PVC	**3**	**084575** CMS-R-CXC-03V	**084577** CMS-M-CA
				5	**085741** CMS-R-CXC-05V	
			P PUR	**5**	**103872** CMS-R-CXC-05P	
			Plug connectors **M8**		**103967** CMS-R-CXC-SC	

Technical data read heads and actuators design C

Parameter	Value min.	Value typ.	Value max.	Unit
Read heads				
Housing material	Reinforced PPS			
Ambient temperature	- 20	-	+60	°C
Degree of protection according to EN 60529	IP 67			
Installation position	Any, alignment with read head should be kept in mind (markings)			
Connection type	Molded cable with crimped ferrules / plug connector M8			
Switching current	24			V
Switching current I_e	-	-	0.5	A
Method of operation	Magnetic, reed contact			
Mechanical life	100 x 10^6 operating cycles			
Vibration resistance	10 ... 55 Hz, amplitude 1 mm			
Shock resistance	30 g / 11 ms			
EMC compliance	According to EN 60947-5-3			
Center offset m from actuator	± 2.5 mm at a distance of s = 3 mm			
Switch-on distance S_{ao}	See ordering table and operating diagrams			
Switch-off distance S_{ar}				
Contact elements				
Actuator				
Housing material	Reinforced PPS			
Ambient temperature	- 20	-	+60	°C
Degree of protection according to EN 60529	IP 67			
Installation position	Any, alignment with read head should be kept in mind (markings)			
Method of operation	Magnetic			
Vibration resistance	10 ... 55 Hz, amplitude 1 mm			
Shock resistance	30 g / 11 ms			
Center offset m from read head	± 2.5 mm at a distance of s = 3 mm			
Switch-on distance S_{ao}	See ordering table and operating diagrams			
Switch-off distance S_{ar}				

Operating diagrams design C

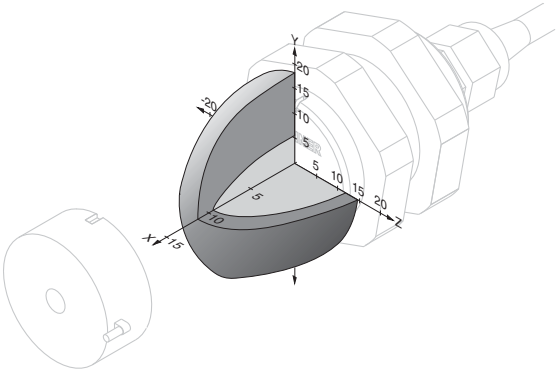

typical switch-on distance

typical switch-off distance

Read heads and actuators design E

- **In combination with evaluation units CMS-E-BR/CMS-E-ER/CMS-E-FR**
- **Cylindrical version M30**
- **With connection cable or plug connector M8**

Alignment of read head and actuator

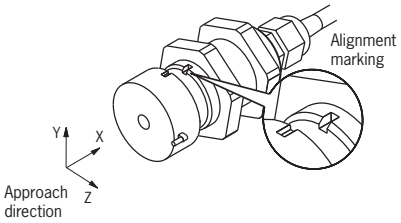

Read heads design E

Dimension drawing

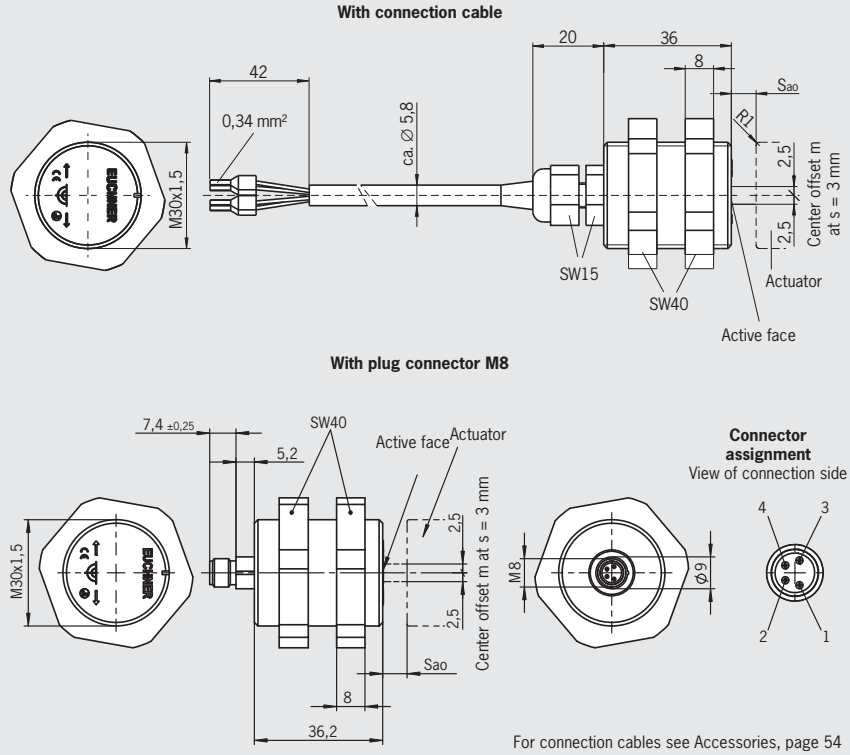

For connection cables see Accessories, page 54

Actuator design E

Dimension drawing

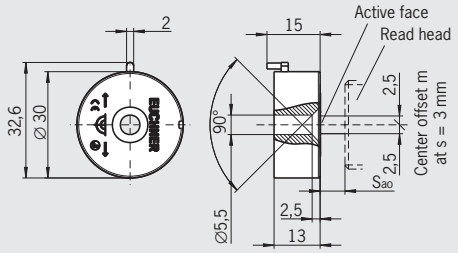

Ordering table (Actuator incl. 1 screw M5 x 25)

Circuit diagram not actuated	Assured switch-on distance s_{ao} [mm]	Assured switch-off distance s_{ar} [mm]	Cable type	Cable length [m]	Read head Order no./item	Actuator Order no./item
BN, WH, GN, YE; 1, 2, 3, 4	6	17	**V** PVC	**3**	**085634** CMS-R-EXM-03V	**085636** CMS-M-EF
				5	**085743** CMS-R-EXM-05V	
			P PUR	**5**	**103874** CMS-R-EXM-05P	
			Plug connectors **M8**		**103969** CMS-R-EXM-SC	

Technical data read heads and actuators design E

Parameter	Value min.	Value typ.	Value max.	Unit
Read heads				
Housing material	Reinforced PPS			
Ambient temperature	- 20	-	+60	°C
Degree of protection according to EN 60529	IP 67			
Installation position	Any, alignment with read head should be kept in mind (markings)			
Connection type	Molded cable with crimped ferrules / plug connector M8			
Switching current	24			V
Switching current I_e	-	-	0.5	A
Method of operation	Magnetic, reed contact			
Mechanical life	100 x 10^6 operating cycles			
Vibration resistance	10 ... 55 Hz, amplitude 1 mm			
Shock resistance	30 g / 11 ms			
EMC compliance	According to EN 60947-5-3			
Center offset m from actuator	± 2.5 mm at a distance of s = 3 mm			
Switch-on distance S_{ao}	See ordering table and operating diagrams			
Switch-off distance S_{ar}				
Contact elements				
Actuator				
Housing material	Reinforced PPS			
Ambient temperature	- 20	-	+60	°C
Degree of protection according to EN 60529	IP 67			
Installation position	Any, alignment with read head should be kept in mind (markings)			
Method of operation	Magnetic			
Vibration resistance	10 ... 55 Hz, amplitude 1 mm			
Shock resistance	30 g / 11 ms			
Center offset m from read head	± 2.5 mm at a distance of s = 3 mm			
Switch-on distance S_{ao}	See ordering table and operating diagrams			
Switch-off distance S_{ar}				

Operating diagrams design E

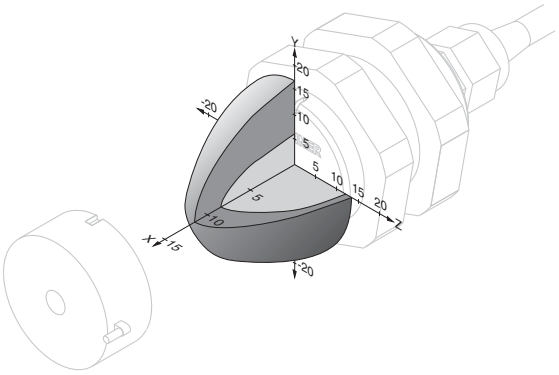

typical switch-on distance

typical switch-off distance

Selection table for non-contact safety system ESM

Evaluation units	Connection	Design	Contact assembly Read head	Assured switch-on distance S_{ao} [mm]	Assured switch-off distance S_{ar} [mm]	Category/ PL according to EN ISO 13849-1	Read head	Actuator
ESM -BA...  Page 44 - 49	Hard-wired encapsulated connection cable/ plug connector on the read head	Design A 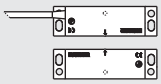 Page 50		9 For contact status indica-tion and LED: 7	20 For contact status indication and LED: 15	4 / PL e	CMS-R-AZA...	CMS-M-AI
				9	22	4 / PL e	CMS-R-AZC...	
		Design B 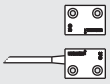 Page 52		7	20	4 / PL e	CMS-R-BZB...	CMS-M-BH

Safety relays ESM-BA..

- **ESM-BA.. up to category 4 according to EN ISO 13849-1**
- **LED status indicators**
- **1-channel or 2-channel control**
- **Up to 7 redundant safety contacts**
- **Auxiliary contact (signaling contact) optional**
- **Short circuit and earth fault/ground fault monitoring optional**

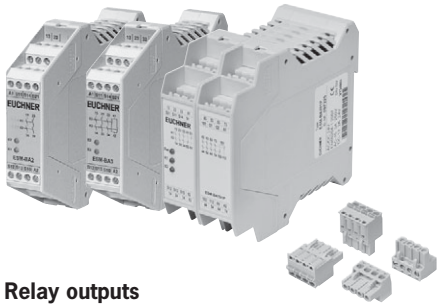

Relay outputs
The outputs are electrically decoupled and of redundant design.

Connection options
By using suitable wiring the following functions can be selected:
- Relay start with automatic start or a start button
- Monitoring of downstream relays or contactors

On the series **ESM-BA..** safety relays, by using suitable wiring it is also possible to select:
- Simultaneity monitoring to monitor safety components over time
- Relay start using a monitored start button
- Short circuit monitoring to detect short circuits between the connection cables and to shut down the outputs or prevent relay starting if necessary
- Earth fault/ground fault monitoring to detect short circuits between the connection cables and earth or ground and to shut down the outputs or prevent relay starting if necessary.

Auxiliary contacts
On series ESM-BA3.. and ESM-BA7.. relays an electrically separate normally closed contact is available as an auxiliary contact.

Connection terminals
Optionally the ESM-BA... devices are also available as version with plug-in connection terminals.

For detailed information, refer to *catalog Safety Relays ESM* and *System Manual ESM*.

Safety relay ESM-BA2..

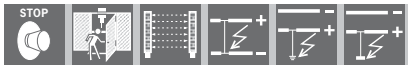

Cat. 4 | STOP 0

Dimension drawing

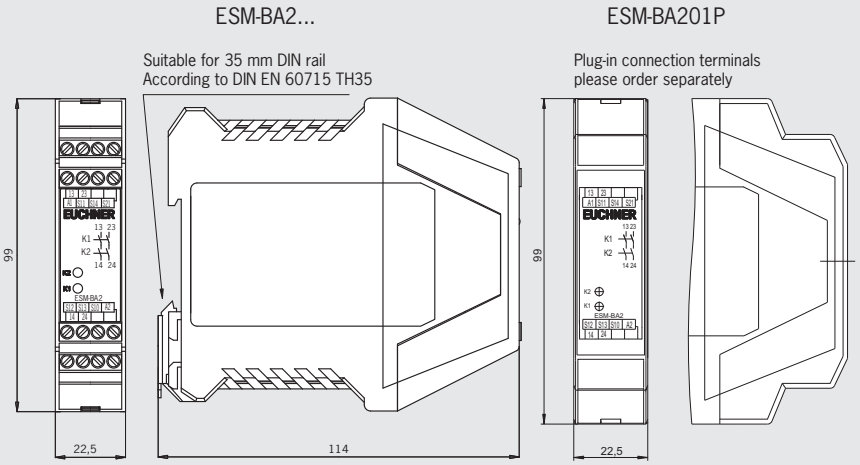

Block diagram

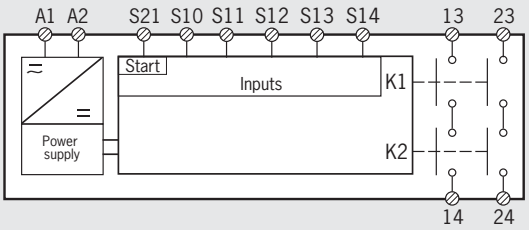

Technical data outputs

Parameter	Value			
Min. switching current at DC 24 V	20 mA			
Switching voltage max.	DC 24 V / AC 250 V			
Utilization category According to EN 60947-5-1		U_e	I_e	ΣI_e
	AC-12	250 V	6 A	12 A
	AC-15	230 V	4 A	
	DC-12	24 V	1.25 A	
	DC-13	24 V	2 A	

U_e = switching voltage
I_e = max. switching current per contact
ΣI_e = max. switching current on all safety contacts (cumulative current)

Ordering table

Series	Version	Contacts	Type	AC/DC 24 V	AC 115 V	AC 230 V
ESM	BA Safety relay	2 2 NO	Screw terminals	**085610** ESM-BA201	**085611** ESM-BA202	**085612** ESM-BA203
			Plug-in connection terminals 1)	**097226** ESM-BA201P	-	-

1) Please order plug-in connection terminals separately (see page 54)

Technical data safety relay ESM-BA2...

Parameter		Value			Unit
Housing material		Polyamide PA6.6			
Dimensions		114 x 99 x 22.5			mm
Weight		Approx. 0.25			kg
Connection terminals		0.14 ... 2.5			mm^2
Ambient temperature	for U_B = 24 V DC	-15 ... +60			°C
	for U_B = 115/230 V AC	-15 ... +40			
Degree of protection according to EN 60529		IP 20			
Degree of contamination		2			
Mounting		DIN rail 35 mm according to DIN EN 60715 TH 35			
Life	Mechanical	1×10^7			operating cycles
Operating voltage	ESM-BA201	24 ± 10% [1]			V AC/DC
	ESM-BA202	115 ± 10%			V AC
	ESM-BA203	230 ± 10%			V AC
Reverse polarity protection		On ESM-BA201			
Rated supply frequency		50 ... 60			Hz
Power consumption		Approx. 3 VA / 1.8 W			
Control voltage for start button		18.6 ... 26			V DC
Control cable length (cross-section 0.75 mm^2)		Max. 1000			m
Control current for start button		Approx. 40			mA
External contact fuse (safety circuit) acc. to EN IEC 60269-1		10 A gG (T4A / F6A)			
Rated impulse withstand voltage, leakage path and air gap according to DIN VDE 0110-1		4			kV
Rated insulation voltage		250			V
Safety contacts		**2 NO contacts (redundant)**			
Min. switching current at 24 V DC		20			mA
Switching voltage max.		24			V DC
		250			V AC
Breaking capacity acc. to UL		6 A 250 V AC 2 A 24 V DC			
Utilization category according to EN 60947-5-1		**U_e**	**I_e**	**ΣI_e**	
	AC-12	250 V	6 A	12 A	
	AC-15	230 V	4 A		
	DC-12	24 V	1.25 A		
	DC-13	24 V	2 A		
LED indicators		2, status display for relays K1 and K2			
Reliability figures according to EN ISO 13849-1 as a function of the switching current at 24 V DC		≤ 0.1 A	≤ 1 A	≤ 2 A	
Number of switching cycles/year		< 400,000	< 73,000	< 17,000	
Mission time		20			years
Category		4			
Performance Level (PL)		e			
PFH_d		1.2×10^{-8}			

1) All the electrical connections must either be isolated from the mains supply by a safety transformer according to EN 61558-2-6 with limited output voltage in the event of a fault, or by other equivalent isolation measures.

U_e = switching voltage I_e = max. switching current per contact ΣI_e = max. switching current on all safety contacts (cumulative current)

Safety relay ESM-BA3..

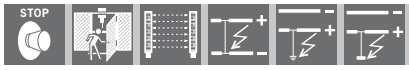

Cat. 4 | STOP 0

Dimension drawing

ESM-BA3...

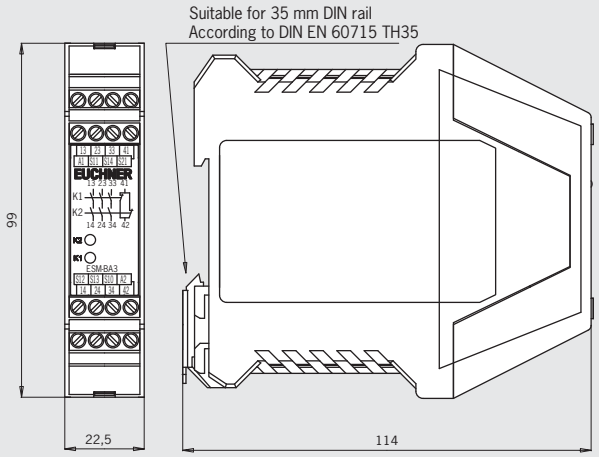

ESM-BA301P

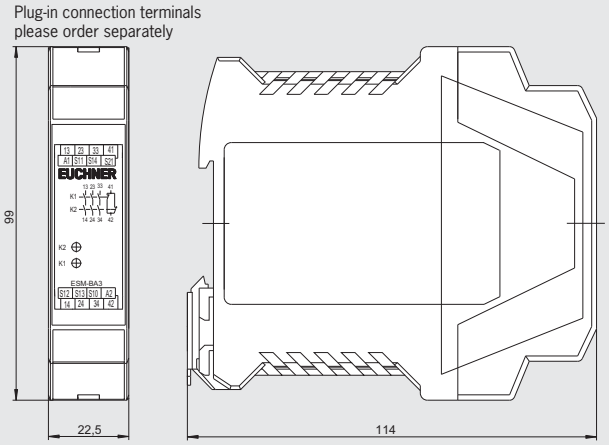

Block diagram

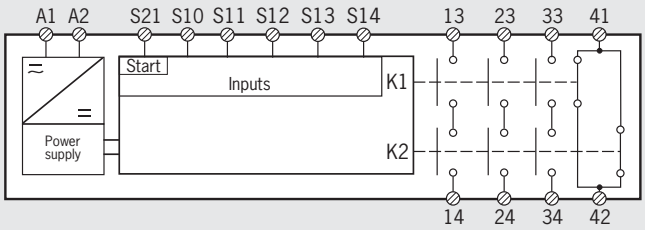

Technical data outputs

Parameter	Value			
Min. switching current at DC 24 V	5 mA			
Switching voltage max.	DC 24 V / AC 250 V			
Utilization category According to EN 60947-5-1		U_e	I_e	ΣI_e
	AC-12	250 V	8 A	15 A [1]
	AC-15	250 V	3 A	
	DC-12	50 V	8 A	
	DC-13	24 V	2 A	

1) With a housing distance of 10 mm. 8 A closely spaced at 40 °C.
U_e = switching voltage
I_e = max. switching current per contact
ΣI_e = max. switching current on all safety contacts (cumulative current)

Ordering table

Series	Version	Contacts	Type	AC/DC 24 V	AC 115 V	AC 230 V
ESM	BA Safety relay	3 3 NO + 1 NC	Screw terminals	085613 ESM-BA301	087412 ESM-BA302	087413 ESM-BA303
			Plug-in connection terminals [1]	097230 ESM-BA301P	-	-

1) Please order plug-in connection terminals separately (see page 54)

Technical data safety relay ESM-BA3...

Parameter		Value			Unit
Housing material		Polyamide PA6.6			
Dimensions		114 x 99 x 22.5			mm
Weight		Approx. 0.25			kg
Connection terminals		0.14 ... 2.5			mm^2
Ambient temperature	for U_B = 24 V DC	-15 ... +40			°C
	for U_B = 115/230 V AC	-15 ... +40			
Degree of protection according to EN 60529		IP 20			
Degree of contamination		2			
Mounting		DIN rail 35 mm according to DIN EN 60715 TH 35			
Life	Mechanical	1×10^7			operating cycles
Operating voltage	ESM-BA301	24 ± 10% [1]			V AC/DC
	ESM-BA302	115 ± 10%			V AC
	ESM-BA303	230 ± 10%			V AC
Reverse polarity protection		On ESM-BA301			
Rated supply frequency		50 ... 60			Hz
Power consumption		Approx. 7			VA
Control voltage for start button		18.6 ... 26			V DC
Control cable length (cross-section 0.75 mm^2)		Max. 1000			m
Control current for start button		Approx. 60			mA
External contact fuse (safety circuit) acc. to EN IEC 60269-1		10 A gG (T6A / F8A)			
Rated impulse withstand voltage, leakage path and air gap according to DIN VDE 0110-1		4			kV
Rated insulation voltage		250			V
Safety contacts		**3 NO contacts (redundant)**			
Cumulative current of all contacts acc. to UL		Max. 15			A
Min. switching current at 24 V DC		5			mA
Switching voltage max.		50			V DC
		250			V AC
Breaking capacity acc. to UL	ESM-BA301	8 A 250 V AC / 2 A 24 V DC			
	ESM-BA302	8 A 250 V AC / 3 A 24 V DC			
	ESM-BA303				
Utilization category according to EN 60947-5-1			U_e	I_e	ΣI_e
		AC-12	250 V	8 A [2]	15 A [3]
		AC-15	250 V	3 A	
		DC-12	50 V	8 A [2]	
		DC-13	24 V	3 A	
LED indicators		2, status display for relays K1 and K2			
Signaling contact		**1 NC contact**			
Switching voltage max.		24			V DC
		250			V AC
Breaking capacity acc. to UL	ESM-BA301	2 A 250 V AC / 1.5 A 24 V DC			
	ESM-BA302	2 A 250 V AC / 2 A 24 V DC			
	ESM-BA303				
Utilization category according to EN 60947-5-1			U_e	I_e	
		AC-12	250 V	2 A	
		AC-15	250 V	1.5 A	
		DC-12	50 V	2 A	
		DC-13	24 V	1.25 A	
Reliability figures according to EN ISO 13849-1 as a function of the switching current at 24 V DC		≤ 0.1 A	≤ 1 A	≤ 2 A	
Number of switching cycles/year		500,000	350,000	50,000	
Mission time		20			years
Category		4			
Performance Level (PL)		e			
PFH_d		1.2×10^{-8}			

1) All the electrical connections must either be isolated from the mains supply by a safety transformer according to EN 61558-2-6 with limited output voltage in the event of a fault, or by other equivalent isolation measures.
2) With Ohmic load.
3) If several ESM-BA3.. are closely spaced under load, the max. cumulative current at an ambient temperature of 20 °C = 9 A; at 30 °C = 3 A; at 40 °C = 1 A. If these currents are exceeded, a spacing of 5 mm between the devices must be observed.

U_e = switching voltage I_e = max. switching current per contact ΣI_e = max. switching current on all safety contacts (cumulative current)

Safety relay ESM-BA7..

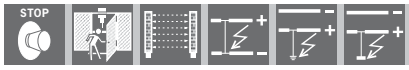

Cat. 4 | STOP 0

Dimension drawing

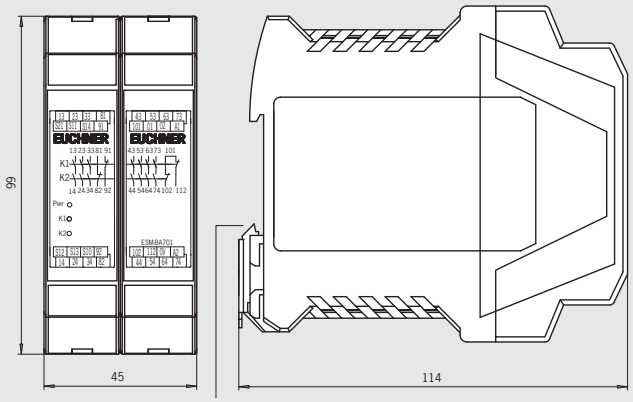

Block diagram

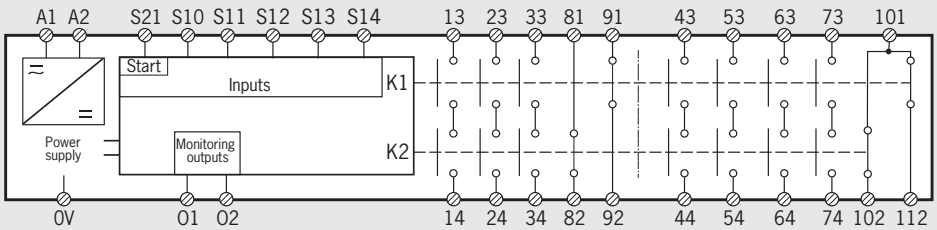

Technical data outputs

Parameter	Value			
Min. switching current at DC 24 V	5 mA			
Switching voltage max.	DC 50 V / AC 250 V			
Utilization category According to EN 60947-5-1		U_e	I_e	ΣI_e
	AC-12	250 V	8 A	35 A [1]
	AC-15	250 V	3 A	
	DC-12	50 V	8 A	
	DC-13	24 V	3 A	

1) With a housing distance of 10 mm. 25 A closely spaced at 40 °C.
U_e = switching voltage
I_e = max. switching current per contact
ΣI_e = max. switching current on all safety contacts (cumulative current)

Ordering table

Series	Version	Contacts	Type	AC/DC 24 V	AC 115 V	AC 230 V
ESM	**BA** Safety relay	**7** 7 NO + 4 NC	Plug-in connection terminals [1]	**097 225** ESM-BA701P	-	-

1) Please order plug-in connection terminals separately (see page 54). Two connection kits are required for devices from series ESM-BA701P.

Technical data safety relay ESM-BA7...

Parameter		Value			Unit
Housing material		Polyamide PA6.6			
Dimensions		114 x 99 x 45			mm
Weight		Approx. 0.35			kg
Connection terminals		0.14 ... 2.5			mm^2
Ambient temperature	for U_B = 24 V DC	-15 ... +40			°C
	for U_B = 115/230 V AC	-15 ... +40			
Degree of protection according to EN 60529		IP 20			
Degree of contamination		2			
Mounting		DIN rail 35 mm according to DIN EN 60715 TH 35			
Life	Mechanical	1×10^6			operating cycles
Operating voltage		24 ± 10% [1]			V AC/DC
Reverse polarity protection		Yes			
Rated supply frequency		50 ... 60			Hz
Power consumption		Approx. 7			VA
Control voltage for start button		18.6 ... 26			V DC
Control cable length (cross-section 0.75 mm^2)		Max. 1000			m
Control current for start button		Approx. 100			mA
External contact fuse (safety circuit) acc. to EN IEC 60269-1		10 A gG (T6A / F8A)			
Rated impulse withstand voltage, leakage path and air gap according to DIN VDE 0110-1		4			kV
Rated insulation voltage		250			V
Safety contacts		**7 NO contacts (redundant)**			
Min. switching current at 24 V DC		5			mA
Switching voltage max.		50			V DC
		250			V AC
Breaking capacity acc. to UL		8 A 250 V AC 2 A 24 V DC			
Utilization category according to EN 60947-5-1		U_e	I_e	ΣI_e	
	AC-12	250 V	8 A	35 A [2]	
	AC-15	250 V	3 A		
	DC-12	50 V	8 A		
	DC-13	24 V	3 A		
LED indicators		2, status display for relays K1 and K2			
Auxiliary contacts		**4 NC contacts**			
Switching voltage max.		50			V DC
		250			V AC
Breaking capacity acc. to UL		2 A 250 V AC 1.5 A 24 V DC			
Utilization category according to EN 60947-5-1		U_e	I_e		
	AC-12	250 V	8 A		
	AC-15	250 V	3 A		
	DC-12	50 V	8 A		
	DC-13	24 V	3 A		
Door monitoring outputs		**2 semiconductor outputs**			
Semiconductor output current		Max. 30			mA
Semiconductor output voltage		24			V DC
Reliability figures according to EN ISO 13849-1 as a function of the switching current at 24 V DC		≤ 0.1 A	≤ 1 A	≤ 2 A	
Number of switching cycles/year		500,000	350,000	50,000	
Mission time		20			years
Category		4			
Performance Level (PL)		e			
PFH_d		2.5×10^{-8}			

1) All the electrical connections must either be isolated from the mains supply by a safety transformer according to EN 61558-2-6 with limited output voltage in the event of a fault, or by other equivalent isolation measures.
2) With a housing distance of 10 mm. 20 A closely spaced at 40 °C.
U_e = switching voltage I_e = max. switching current per contact ΣI_e = max. switching current on all safety contacts (cumulative current)

Read heads and actuators design A for ESM

- **In combination with evaluation units ESM-BA...**
- **Cube-shaped version 88 x 25 mm**

Alignment of read head and actuator

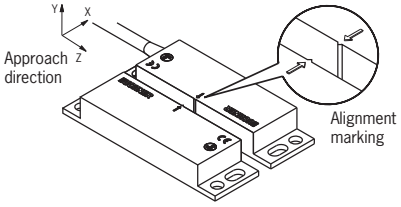

Note:
The dimensions of the actuators are the same as those of the read heads, although the former have no connection cable or plug connector.

Read heads/actuators design A for ESM

Dimension drawing

With connection cable

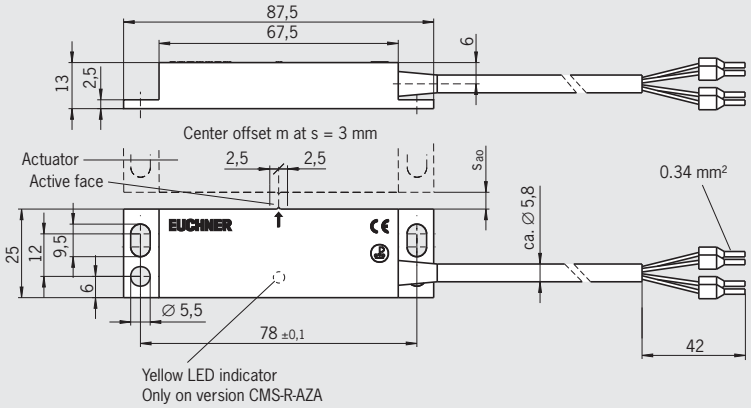

With plug connector M8

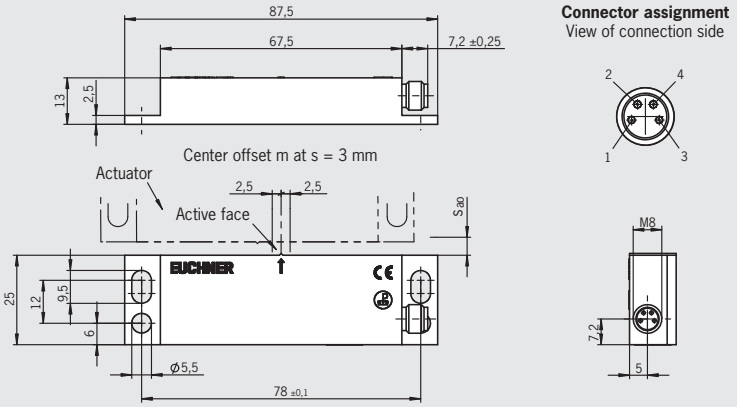

For connection cables see Accessories, page 54

Ordering table (Read heads and actuators each incl. 2 safety screws M4 x 14)

Circuit diagram not actuated	Assured switch-on distance s_{ao} [mm]	Assured switch-off distance s_{ar} [mm]	Cable type	Cable length [m]	Read head Order no./item	Actuator Order no./item
F1 BN WH; F2 GN YE; Rv PK GY	9 For contact status indication and LED: 7	20 For contact status indication and LED: 15	**V** PVC	**5**	**094702** CMS-R-AZA-05VL	**093976** CMS-M-AI
				10	**095558** CMS-R-AZA-10VL	
F1 1 2; F2 3 4	9	22	Plug connectors **M8**		**102275** CMS-R-AZC-SC	

Technical data read heads and actuators design A for ESM

Parameter	Value min.	typ.	max.	Unit
Read heads				
Housing material	Reinforced PPS			
Ambient temperature	- 20	-	+60	°C
Degree of protection according to EN 60529	IP 67			
Installation position	Any, alignment with read head should be kept in mind (markings)			
Connection type	Molded cable with crimped ferrules / plug connector M8			
Switching current	24			V
Switching current I_e	-	-	0.1	A
Contact status indication (only CMS-R-AZA...)				
Switching current	24			V
Switching current I_e	-	-	0.015	A
Method of operation	Magnetic, reed contact			
Mechanical life	100 x 10^6 operating cycles			
Vibration resistance	10 ... 55 Hz, amplitude 1 mm			
Shock resistance	30 g / 11 ms			
EMC compliance	According to EN 60947-5-3			
Center offset m from actuator	± 2.5 mm at a distance of s = 3 mm			
Switch-on distance S_{ao}	See ordering table and operating diagrams			
Switch-off distance S_{ar}				
Contact elements				
Actuator				
Housing material	Reinforced PPS			
Ambient temperature	- 20	-	+60	°C
Degree of protection according to EN 60529	IP 67			
Installation position	Any, alignment with read head should be kept in mind (markings)			
Method of operation	Magnetic			
Vibration resistance	10 ... 55 Hz, amplitude 1 mm			
Shock resistance	30 g / 11 ms			
Center offset m from read head	± 2.5 mm at a distance of s = 3 mm			
Switch-on distance S_{ao}	See ordering table and operating diagrams			
Switch-off distance S_{ar}				
Reliability values according to EN ISO 13849-1				
B_{10d}	20 x 10^6 operating cycles			

Operating diagrams design A for ESM

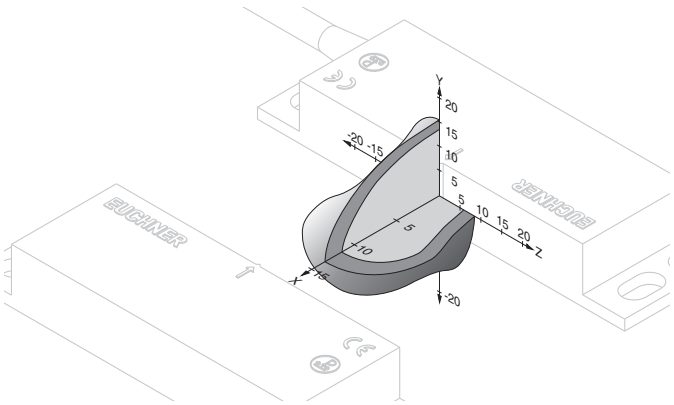

typical switch-on distance

typical switch-off distance

Read heads and actuators design B for ESM

- **In combination with evaluation units ESM-BA...**
- **Cube-shaped version 36 x 26 mm**

Alignment of read head and actuator

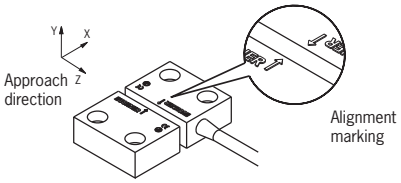

Note:
The dimensions of the actuators are the same as those of the read heads, although the former have no connection cable or plug connector.

Read heads/actuators design B for ESM

Dimension drawing

With connection cable

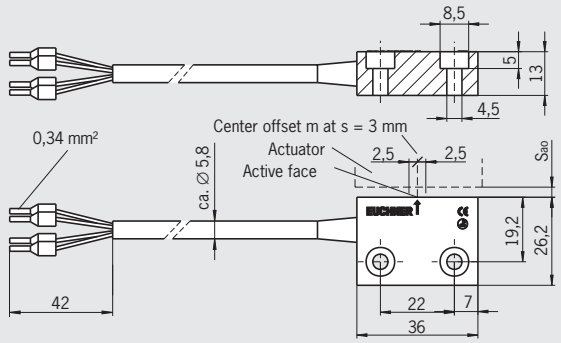

With plug connector M8

Connector assignment
View of connection side

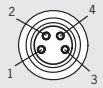

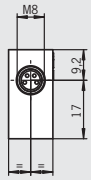

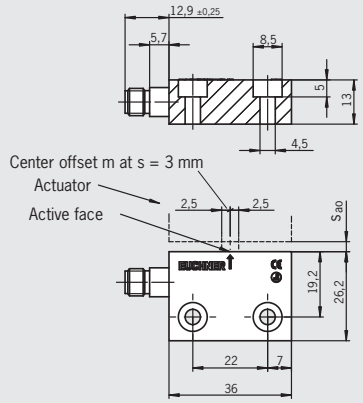

For connection cables see Accessories, page 54

Ordering table (Read heads and actuators each incl. 2 safety screws M4 x 14)

Circuit diagram not actuated	Assured switch-on distance s_{ao} [mm]	Assured switch-off distance s_{ar} [mm]	Cable type	Cable length [m]	Read head Order no./item	Actuator Order no./item
F1 BN WH F2 GN YE	7	20	**V** PVC	**3**	**097368** CMS-R-BZB-03V	**092025** CMS-M-BH
F1 1 2 F2 3 4	7	20	Plug connectors **M8**		**100753** CMS-R-BZB-SC	

Technical data read heads and actuators design B for ESM

Parameter	Value min.	typ.	max.	Unit
Read heads				
Housing material	Reinforced PPS			
Ambient temperature	- 20	-	+60	°C
Degree of protection according to EN 60529	IP 67			
Installation position	Any, alignment with read head should be kept in mind (markings)			
Connection type	Molded cable with crimped ferrules / plug connector M8			
Switching current	24			V
Switching current I_e	-	-	0.1	A
Method of operation	Magnetic, reed contact			
Mechanical life	100 x 10^6 operating cycles			
Vibration resistance	10 ... 55 Hz, amplitude 1 mm			
Shock resistance	30 g / 11 ms			
EMC compliance	According to EN 60947-5-3			
Center offset m from actuator	± 2.5 mm at a distance of s = 3 mm			
Switch-on distance S_{ao}	See ordering table and operating diagrams			
Switch-off distance S_{ar}				
Contact elements				
Actuator				
Housing material	Reinforced PPS			
Ambient temperature	- 20	-	+60	°C
Degree of protection acc. to EN IEC 60529	IP 67			
Installation position	Any, alignment with read head should be kept in mind (markings)			
Method of operation	Magnetic			
Vibration resistance	10 ... 55 Hz, amplitude 1 mm			
Shock resistance	30 g / 11 ms			
Center offset m from read head	± 2.5 mm at a distance of s = 3 mm			
Switch-on distance S_{ao}	See ordering table and operating diagrams			
Switch-off distance S_{ar}				
Reliability values according to EN ISO 13849-1				
B_{10d}	20 x 10^6 operating cycles			

Operating diagrams design B for ESM

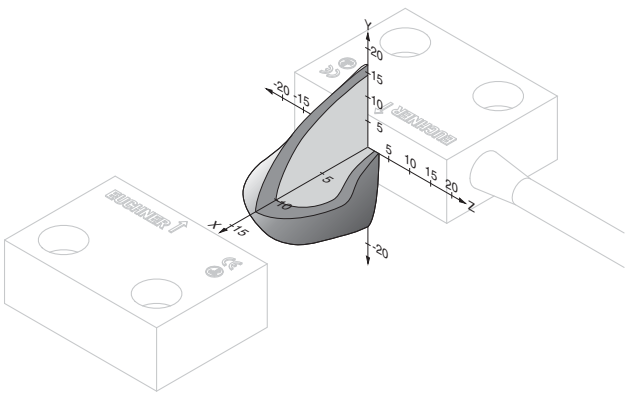

typical switch-on distance

typical switch-off distance

Accessories

- **Connection cables for CMS read heads**
- **Jumpers for CMS evaluation units**

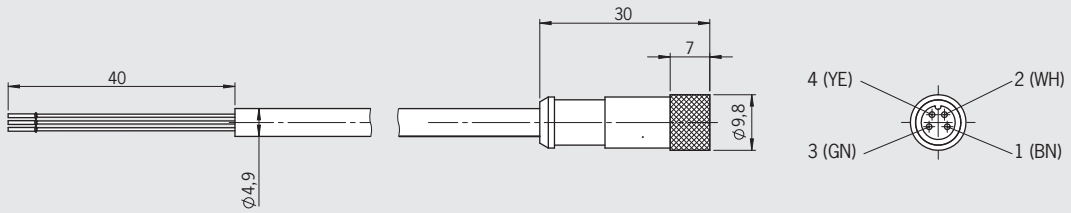

Ordering table

Designation	Use	Cable length [m]	Order no./item
Connection cable PVC 4 x 0.25 mm² with plug connector M8 4-pin	For read heads CMS with plug connector M8	**1**	**104142** C-M08F04-04X025PV01,0-ES-104142
		3	**104143** C-M08F04-04X025PV03,0-ES-104143
		5	**104144** C-M08F04-04X025PV05,0-ES-104144
		10	**104145** C-M08F04-04X025PV10,0-ES-104145
2-pole jumper (Packaging unit 10 ea.)	For evaluation unit CMS-E-BR/ER	-	**085665** CMS-A-J2
3-pole jumper (Packaging unit 10 ea.)	For evaluation unit CMS-E-AR/FR	-	**085666** CMS-A-J3
4-pole jumper (Packaging unit 10 ea.)	For evaluation unit CMS-E-AR	-	**085667** CMS-A-J4

Accessories for safety modules ESM

- **Connection kit ESM...P with screw terminals or spring terminals**

Important: One connection kit is required, depending on the device (see information on the corresponding product page). Two connection kits are required for devices from series ESM-BA701P.

Ordering table

Designation	Description	Order no./item
Connection kit ESM...P with screw terminals	Comprising: 4 plug-in screw terminals (can be coded) 2 jumpers coding pins	**097194** ESM-F-AK4
Connection kit ESM...P with spring terminals	Comprising: 4 plug-in spring terminals (can be coded) 2 jumpers coding pins	**097195** ESM-F-KK4

Index by item designation

Index by order number

Representatives

International

Austria
EUCHNER GmbH
Aumühlweg 17-19/Halle 1C
2544 Leobersdorf
Tel. +43 720 010 200
Fax +43 720 010 200-20
info@euchner.at

Benelux
EUCHNER (BENELUX) BV
Visschersbuurt 23
3356 AE Papendrecht
Tel. +31 78 615-4766
Fax +31 78 615-4311
info@euchner.nl

Brazil
EUCHNER Com.Comp.
Eletronicos Ltda.
Av. Prof. Luiz Ignácio Anhaia Mello,
no. 4387
Vila Graciosa
São Paulo - SP - Brasil
CEP 03295-000
Tel. +55 11 29182200
Fax +55 11 23010613
euchner@euchner.com.br

Canada
EUCHNER Canada Inc.
2105 Fasan Drive
Oldcastle, ON N0R 1L0
Tel. +1 519 800-8397
Fax +1 519 737-0314
sales@euchner.ca

China
EUCHNER (Shanghai)
Trading Co., Ltd.
No. 15 building,
No. 68 Zhongchuang Road,
Songjiang
Shanghai, 201613, P.R.C
Tel. +86 21 5774-7090
Fax +86 21 5774-7599
info@euchner.com.cn

Czech Republic
EUCHNER electric s.r.o.
Trnkova 3069/117h
628 00 Brno
Tel. +420 533 443-150
Fax +420 533 443-153
info@euchner.cz

Denmark
Duelco A/S
Systemvej 8 - 10
9200 Aalborg SV
Tel. +45 7010 1007
Fax +45 7010 1008
info@duelco.dk

Finland
Sähkölehto Oy
Holkkitie 14
00880 Helsinki
Tel. +358 9 7746420
office@sahkolehto.fi

France
EUCHNER France S.A.R.L.
Parc d'Affaires des Bellevues
Allée Rosa Luxembourg
Bâtiment le Colorado
95610 ERAGNY sur OISE
Tel. +33 1 3909-9090
Fax +33 1 3909-9099
info@euchner.fr

Hungary
EUCHNER Magyarország Kft.
FSD Park 2.
2045 Törökbálint
Tel. +36 1 919 0855
Fax +36 1 919 0857
info@euchner.hu

India
EUCHNER (India) Pvt. Ltd.
401, Bremen Business Center,
City Survey No. 2562,
University Road
Aundh, Pune - 411007
Tel. +91 20 64016384
Fax +91 20 25885148
info@euchner.in

Israel
Ilan & Gavish Automation Service Ltd.
26 Shenkar St. Qiryat Arie 49513
P.O. Box 10118
Petach Tikva 49001
Tel. +972 3 9221824
Fax +972 3 9240761
mail@ilan-gavish.com

Italy
TRITECNICA SpA
Viale Lazio 26
20135 Milano
Tel. +39 02 541941
Fax +39 02 55010474
info@tritecnica.it

Japan
EUCHNER Co., Ltd.
1662-3 Komakiharashinden
Komaki-shi, Aichi-ken
485-0012, Japan
Tel. +81 568 42 0157
Fax +81 568 42 0159
info@euchner.jp

Korea
EUCHNER Korea Co., Ltd.
115 Gasan Digital 2 - Ro
(Gasan-dong, Daeryung
Technotown 3rd Rm 810)
153 - 803 Kumchon-Gu, Seoul
Tel. +82 2 2107-3500
Fax +82 2 2107-3999
info@euchner.co.kr

Mexico
EUCHNER México S de RL de CV
Conjunto Industrial PK Co.
Carretera Estatal 431 km. 1+300
Ejido El Colorado, El Marqués
76246 Querétaro, México
Tel. +52 442 402 1485
Fax +52 442 402 1486
info@euchner.mx

Poland
ELTRON
Pl. Wolności 7B
50-071 Wrocław
Tel. +48 71 3439755
Fax +48 71 3441141
eltron@eltron.pl

Portugal
PAM Servicos Tecnicos Industriais Lda.
Rua de Timor - Pavilhao 2A
Zona Industrial da Abelheira
4785-123 Trofa
Tel. +351 252 418431
Fax +351 252 494739
pam@mail.telepac.pt

Republic of South Africa
RUBICON
ELECTRICAL DISTRIBUTORS
4 Reith Street, Sidwell
6061 Port Elizabeth
Tel. +27 41 451-4359
Fax +27 41 451-1296
sales@rubiconelectrical.com

Romania
First Electric SRL
Str. Ritmului Nr. 1 Bis
Ap. 2, Sector 2
021675 Bucuresti
Tel. +40 21 2526218
Fax +40 21 3113193
office@firstelectric.ro

Singapore
BM Safety Singapore Pte Ltd.
Blk 3, Ang Mo Kio Industrial Park 2A
#05-06
Singapore 568050
Tel. +65 6744 8018
Fax +65 6744 1929
sales@bmsafety.com.sg

Slovakia
EUCHNER electric s.r.o.
Trnkova 3069/117h
628 00 Brno
Tel. +420 533 443-150
Fax +420 533 443-153
info@euchner.cz

Slovenia
SMM proizvodni sistemi d.o.o.
Jaskova 18
2000 Maribor
Tel. +386 2 4502326
Fax +386 2 4625160
franc.kit@smm.si

Spain
EUCHNER, S.L.
Gurutzegi 12 - Local 1
Polígono Belartza
20018 San Sebastian
Tel. +34 943 316-760
Fax +34 943 316-405
info@euchner.es

Sweden
Censit AB
Box 331
33123 Värnamo
Tel. +46 370 691010
Fax +46 370 18888
info@censit.se

Switzerland
EUCHNER AG
Falknisstrasse 9a
7320 Sargans
Tel. +41 81 720-4590
Fax +41 81 720-4599
info@euchner.ch

Taiwan
Daybreak Int'l (Taiwan) Corp.
3F, No. 124, Chung-Cheng Road
Shihlin 11145, Taipei
Tel. +886 2 8866-1234
Fax +886 2 8866-1239
day111@ms23.hinet.net

Turkey
EUCHNER Endüstriyel Emniyet
Teknolojileri Ltd. Şti.
Hattat Bahattin Sok.
Ceylan Apt. No. 13/A
Göztepe Mah.
34730 Kadıköy / Istanbul
Tel. +90 216 359-5656
Fax +90 216 359-5660
info@euchner.com.tr

United Kingdom
EUCHNER (UK) Ltd.
Unit 2 Petre Drive,
Sheffield
South Yorkshire
S4 7PZ
Tel. +44 114 2560123
Fax +44 114 2425333
sales@euchner.co.uk

USA
EUCHNER USA Inc.
6723 Lyons Street
East Syracuse, NY 13057
Tel. +1 315 701-0315
Fax +1 315 701-0319
info@euchner-usa.com

EUCHNER USA Inc.
Detroit Office
130 Hampton Circle
Rochester Hills, MI 48307
Tel. +1 248 537-1092
Fax +1 248 537-1095
info@euchner-usa.com

Germany

Augsburg
EUCHNER GmbH + Co. KG
Ingenieur- und Vertriebsbüro
Julius-Spokojny-Weg 8
86153 Augsburg
Tel. +49 821 56786540
Fax +49 821 56786541
peter.klopfer@euchner.de

Berlin
EUCHNER GmbH + Co. KG
Ingenieur- und Vertriebsbüro
Ulmenstraße 115a
12621 Berlin
Tel. +49 30 50508214
Fax +49 30 56582139
alexander.walz@euchner.de

Chemnitz
EUCHNER GmbH + Co. KG
Ingenieur- und Vertriebsbüro
Am Vogelherd 2
09627 Bobritzsch-Hilbersdorf
Tel. +49 37325 906000
Fax +49 37325 906004
jens.zehrtner@euchner.de

Düsseldorf
EUCHNER GmbH + Co. KG
Ingenieur- und Vertriebsbüro
Tippgarten 3
59427 Unna
Tel. +49 2308 9337284
Fax +49 2308 9337285
christian.schimke@euchner.de

Essen
Thomas Kreißl
fördern - steuern - regeln
Hackenberghang 8a
45133 Essen
Tel. +49 201 84266-0
Fax +49 201 84266-66
info@kreissl-essen.de

Freiburg
EUCHNER GmbH + Co. KG
Ingenieur- und Vertriebsbüro
Steige 5
79206 Breisach
Tel. +49 7664 403833
Fax +49 7664 403834
peter.seifert@euchner.de

Lübeck
EUCHNER GmbH + Co. KG
Ingenieur- und Vertriebsbüro
Am Stadtrand 13
23556 Lübeck
Tel. +49 451 88048371
Fax +49 451 88184364
martin.pape@euchner.de

Nürnberg
EUCHNER GmbH + Co. KG
Ingenieur- und Vertriebsbüro
Steiner Straße 22a
90522 Oberasbach
Tel. +49 911 6693829
Fax +49 911 6696722
ralf.paulus@euchner.de

Stuttgart
EUCHNER GmbH + Co. KG
Ingenieur- und Vertriebsbüro
Kohlhammerstraße 16
70771 Leinfelden-Echterdingen
Tel. +49 711 7597-0
Fax +49 711 7597-303
oliver.laier@euchner.de
uwe.kupka@euchner.de

Wiesbaden
EUCHNER GmbH + Co. KG
Ingenieur- und Vertriebsbüro
Adolfsallee 3
65185 Wiesbaden
Tel. +49 611 98817644
Fax +49 611 98895071
giancarlo.pasquesi@euchner.de

02/18

EUCHNER

More than safety.

Support hotline

You have technical questions about our products or how they can be used?
For further questions please contact your local sales representative.

Comprehensive download area

You are looking for more information about our products?
You can simply and quickly download operating instructions, CAD or ePLAN data and accompanying software for our products at www.euchner.com.

Customer-specific solutions

You need a specific solution or have a special requirement?
Please contact us. We can manufacture your custom product even in small quantities.

EUCHNER near you

You are looking for a contact at your location? Along with the headquarters in Leinfelden-Echterdingen, the worldwide sales network includes 17 subsidiaries and numerous representatives in Germany and abroad – you will definitely also find us near you.

www.euchner.com

EUCHNER GmbH + Co. KG
Kohlhammerstraße 16
70771 Leinfelden-Echterdingen
Germany
Tel. +49 711 7597-0
Fax +49 711 753316
info@euchner.de
www.euchner.com

EUCHNER
More than safety.