Wire-actuated encoder SG30
robust design with a measurement length of 3000 mm

Profile

- Compact, robust design
- Variable mounting options
- Measuring lengths up to 3000 mm
- Potentiometer, voltage or power output
- Housing made of zinc die-cast and plastic
- Lockable ventilation holes against condensation
- High tightness at the rope outlet
- M12 plug connection

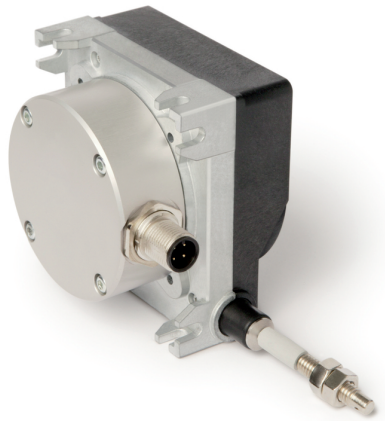

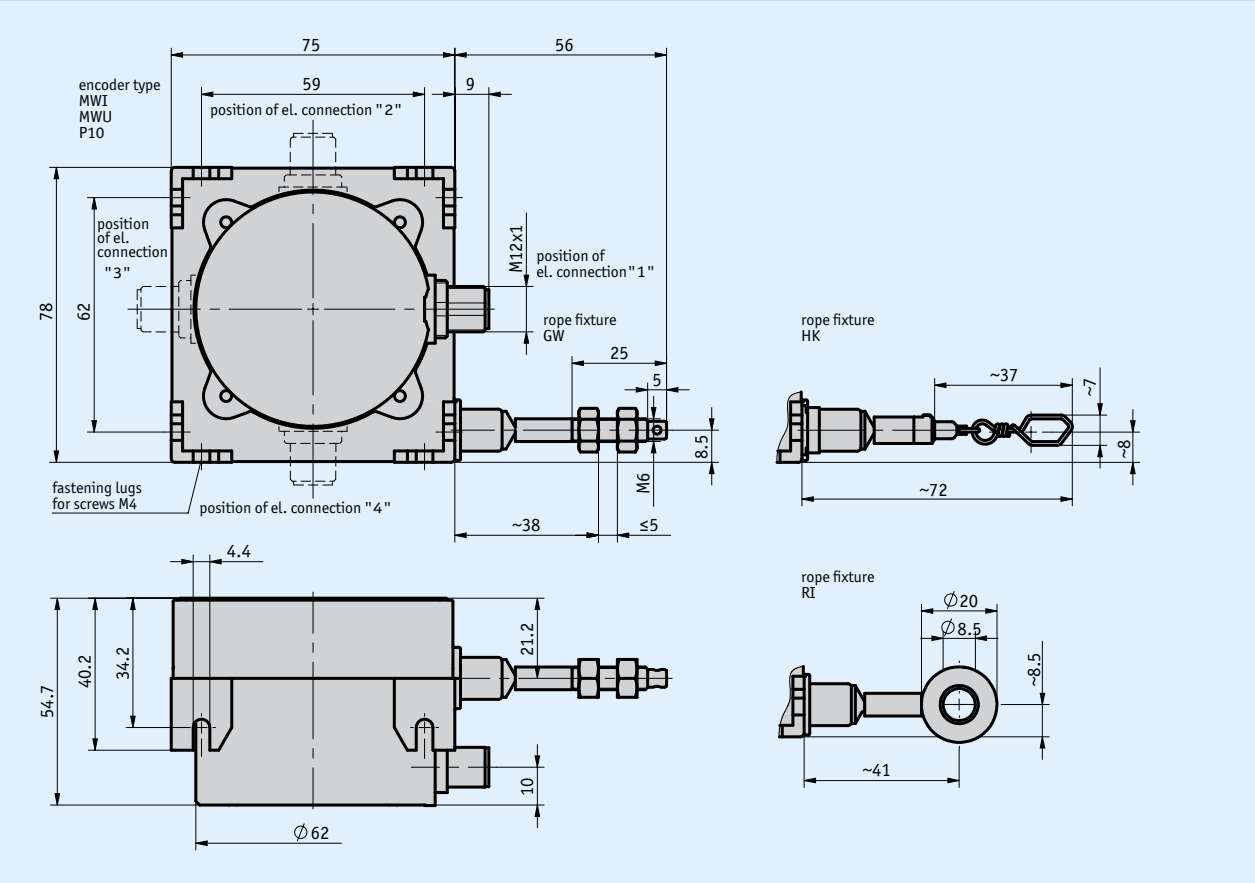

Mechanical data

Feature	Technical data	Additional information
Housing	zinc die-cast, plastic	
Wire design	ø0.61 mm	steel wire (stainless), plastic coated
	ø0.6 mm	steel wire (stainless)
Extension force	≥3 N	
Cable length	≤30 m	P10, MWI encoder types
	≤20 m	MWU encoder type
Weight	~0.5 kg	

Electrical data

Encoder potentiometer

Feature	Technical data	Additional information
Power rating	2 W at 70 °C	
Resistance	10 kΩ	
Resistance tolerance	±5 %	
Linearity tolerance	±0.25 %	
Type of connection	M12 plug connector (A-coded)	4-pole, 1x pin

Transducer, power output

Feature	Technical data	Additional information
Operating voltage	7 … 30 V DC	at 0 Ω load
	12 … 30 V DC	at 250 Ω load
	17 … 30 V DC	at 500 Ω load
Output current	4 … 20 mA	
Type of connection	M12 plug connector (A-coded)	4-pole, 1x pin

Transducer, voltage output

Feature	Technical data	Additional information
Operating voltage	15 … 28 V DC	at 3 mA without load
Output voltage	0 … 10 V DC	I_{Load} ≤10 mA
Resistance	2 … 10 kΩ	against GND
Load	≤15 mA	
Type of connection	M12 plug connector (A-coded)	4-pole, 1x pin

* Measurement transducers permit optimum adjustment of the output current and output voltage to the measuring range. The measurement transducer is pre-set at the works so that an output signal of 4 … 20 mA (MWI) or 0 … 10 V DC (MWU) is available.

System data

Feature	Technical data	Additional information
Repeat accuracy	±0.15 mm	per direction of approach
Measuring range	≤3000 mm	
Travel speed	≤800 mm/s	

Ambient conditions

Feature	Technical data	Additional information
Ambient temperature	-40 … 80 °C	
Relative humidity		condensation inadmissible
Protection category	IP65 (encoder part)	EN 60529

Pin assignment

Potentiometric outputs P10

Signal	PIN
Po	1
Pe	2
S	3
	4

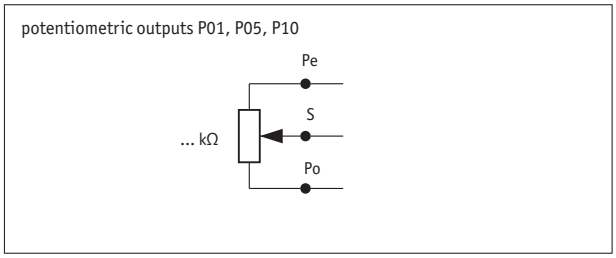

MWI transducer

Signal	PIN
I+	1
I-	2
nc	3
nc	4

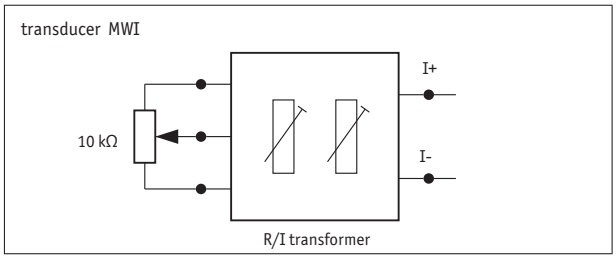

MWU transducer

Signal	PIN
+24 V DC	1
GND	2
U_{out}	3
nc	4

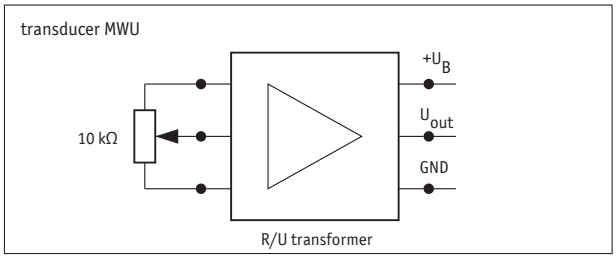

Hint for mounting

When securing the wire it must be ensured that the wire is straight and vertical in relation to the wire outlet.
Recommendation: Only select the starting position after an unwound length of approx. 5 mm. This prevents the wire hitting the end stop when it is rewound.

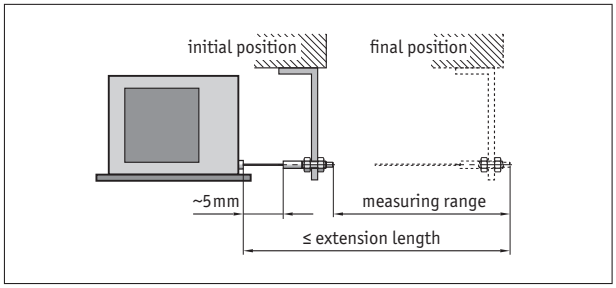

Symbolic representation

Order

Ordering table

Feature	Ordering data	Specification	Additional information
Measuring range	... A	2000, 2500, 3000 in mm	
Rope fixture	GW B	wire suspension with thread	
	HK	wire suspension with hook	
	RI	wire suspension with ring	
Encoder type	MWI C	transducer, current	
	MWU	transducer, voltage	
	P10	potentiometer	
Position of electrical connection	1 D	direction of wire outlet	
	2	upward	
	3	opposite the wire outlet	
	4	downward	

Order key

SG30 - [ ] - [ ] - [ ] - [ ]
A B C D

Scope of delivery: *SG30*

Accessories:

Electronic display MA50	*www.siko-global.com*
Guide roller UR	*www.siko-global.com*
Wire extension piece SV	*www.siko-global.com*
Mating Connector Overview	*www.siko-global.com*
Mating connector, P10, MWI, MWU, 4-pole, socket	*Order key 83419*
Mating connector, P10, MWI, MWU, 4-pole, socket	*Order key 83526*

subject to technical alteration • 2020/09/21 • 11:55